PRELIMINARY
OPERATION AND SERVICE MANUAL
FOR THE
REFRACTIVE INDEX DETECTOR
RI2000

Schambeck SFD GmbH
Rhöndorfer Strasse 51 · D – 53604 Bad Honnef, Germany
Telephone: +49 (0) 2224 9239 0 · Telefax: +49 (0) 2224 9239 20
http://www.schambeck-sfd.com

Version 2.0 (FirmWare V4.0)
Printed: 31/01/2008 12:38:23

File: RI2000 english V4.0 neue Bilder - 2.doc
Last modified: b.richter

TABLE OF CONTENTS

1 CONTACT ADDRESS

In case of problems with your RI2000 refractive index detector please contact your local distributor or Schambeck SFD GmbH.

Schambeck SFD GmbH
Rhöndorfer Strasse 51
D – 53604 Bad Honnef
Germany

Telephone: +49 (0) 2224 9239 0
Telefax: +49 (0) 2224 9239 20

http://www.schambeck-sfd.com
Email: mailto@schambeck-sfd.com

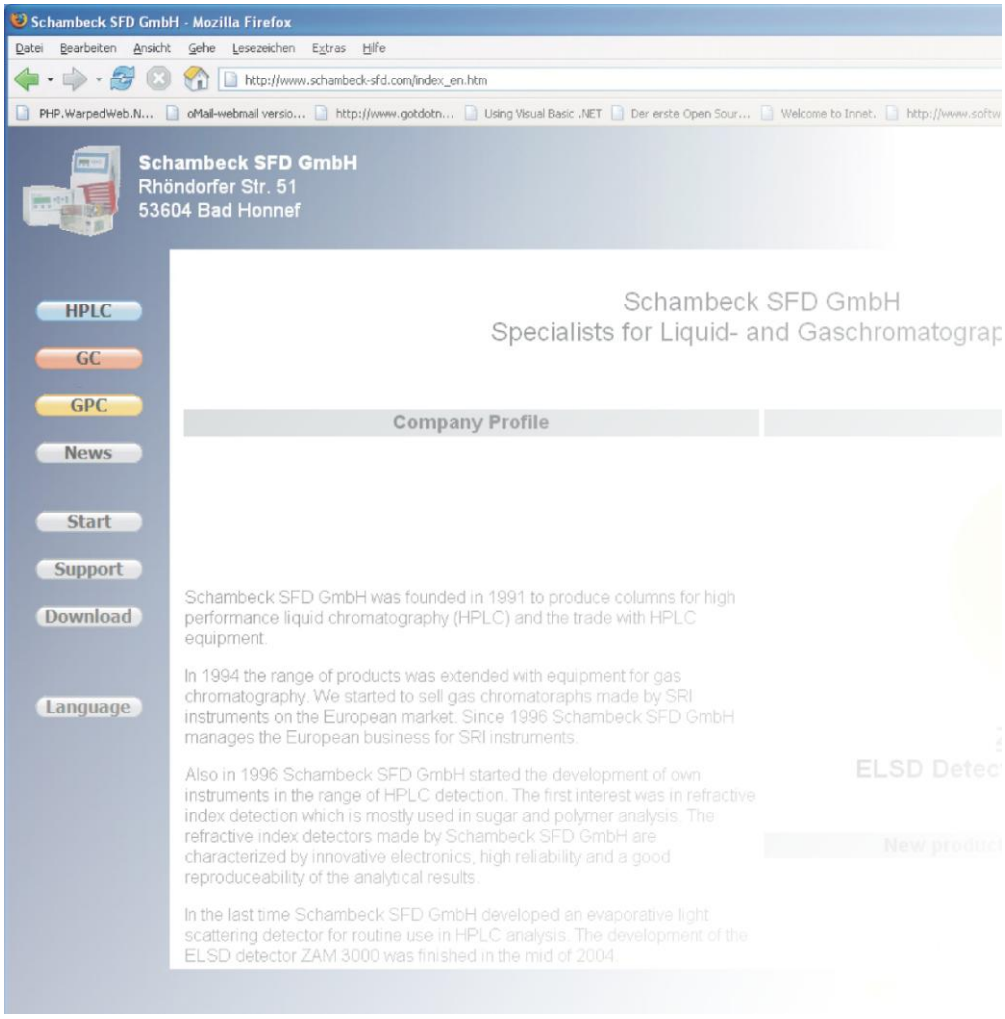

2 PRECAUTION AND WARNINGS

The manufacturer is not reliable for any damage, harm or financial loss caused directly or indirectly by the use of this instrument if the instrument is handled without the observation of this manual or handling with carelessness.

NOTE

Please read this manual carefully before working with the RI2000 refractive index detector. In case of any question please do not hesitate to contact your local distributor or Schambeck SFD GmbH directly.

3 ELECTRICAL WARNINGS

- Before opening the housing of the instrument make sure the detector is switched off and disconnected from power supply.
- The voltage selected at the fuse on the backside of the instrument has to be set correctly to 110 V or 220 V according to your local power supply. Wrong voltage selection will cause damages to the instrument.
- Before changing the selected voltage the instrument has to be disconnected from the power supply.
- The detector may only be connected to plugs with grounding.
- The RI2000 may only be operated in connection with other devices which fit to the safety requirements.

4 GENERAL WARNINGS

- To prevent damages of the RI2000 all capillaries and cables have to be checked for damages and leakages in regular time intervals.

- For the disposal of inflammable and/or toxic solvents a plan for waste management has to be created. Such solvents may not get into the drain.

- The RI2000 refractive index detector is built to operate at temperatures between 10 °C and 35 °C.

- To reach a reliable operation of the detector it is recommended to use filtered samples and solvents only.

- The detector may be cleaned with appropriate cleaning agents only.

- Make sure that no liquid gets inside the detector. Liquid inside the housing may cause electrical short circuits which may result in the damage of the instrument.

- To prevent electrical shocks make sure that the detector is disconnected from power supply when the housing is opened to perform service work inside.

- To disconnect the instrument from power supply simply unplug the power cable.

- Electronic circuit boards and electronic components are sensitive to electrostatical charges.

- For some maintenance operation it is required to open the instrument's housing. Make sure that the instrument is disconnected from power supply before removing the housing. It is necessary to remove the housing during operation make sure that electrical parts inside are not touched.

- In case of the use of dangerous solvents pay attention to safety instructions regarding this solvent. Please refer to the supplier's safety data sheet before using this solvent.

- Solvents should be degassed before use with a refractive index detector.

- After use of salt containing solvents (such as buffers) the detector should be purged with distilled water.

- Make sure that the 6 bar (0.6 MPa) pressure limit of the flow cell is not exceeded.

- Make sure that the 2 bar (0.2 MPa) pressure limit of the valve is not exceeded.

- During operation the housing of the detector should be closed. Only for service work it might be necessary to open the instrument's housing.

- Do not use the detector in ambience of aggressive gases, very high humidity, strong vibrations and strong changes in the ambience's temperature.

5 SPECIFICATIONS

Type of detection:	Refractive Index
Effective range for refractive index:	1.00 – 1.75 RIU
Effective range:	± 1000 µRIU
Optical null balance:	In the whole effective range by adjusting the mirror
Signal null balance:	In the whole effective range by using the AutoZero function
Materials which contact the mobile phase:	Stainless steel, glass, PTFE
Maximum pH-range:	2.3 – 9.5
Temperature control for optical bench:	7°C above ambient temperature, 35 °C up to 55 °C in 1 °C steps
Analog signal output:	Recorder / integrator
Noise (analog signal):	± 7 nRIU (± 7 µV)
Noise (digital output):	± 3 nRIU (± 3 µV)
Drift:	1 µRIU/h (1mV/h)
Integrator output:	± 1.2 V (fix)
Recorder output:	± 1.2 V (adjustable)
Recorder range:	8 steps selectable in the region from 1/8 to 16/1
Recorder offset:	Selectable
Signal range (recorder):	Selectable
Recorder marker:	Marker function ON/OFF
Flow cell:	Glass cell (quartz) with two chambers
Volume:	9 µL
Angel:	45 °
Max. Pressure:	6 bar (0.6 MPa)
Max. Flow rate:	0.1 – 3.0 mL/min
Valve:	3/2 path valve, 12 V
Max. Pressure:	2 bar (0.2 MPa)
Volumes:	Sample entry → sample cell: 22 µL
	Sample entry → sample cell → sample exit: 600 µL
	Sample entry → sample cell → reference cell → sample exit: 1300 µL
Communication:	Digital interface: RS232, bidirectional Digital input: TTL (Purge, AutoZero, Start/Marker) Digital output: TTL (Intensity alarm)

6 PHYSICAL SPECIFICATIONS

Dimensions:	220 mm * 165 mm * 350 mm (W * H * D)
Weight:	12 kg
Voltages:	Mains adaptor with voltage selector 100 – 120 V 220 – 240 V
Frequency:	50 or 60 Hz
Power consumption:	max. 50 W
Temperature range:	10 °C to 50 °C

7 GUARANTEE CONDITIONS

The term of guarantee depends on you local law. Beside this Schambeck SFD GmbH affords guarantee for at least 12 months beginning after purchase of the RI2000 refractive index detector.
All instruments are tested and certified by Schambeck SFD GmbH quality control.
Only defects which result from faulty manufacture or material defects are covered by the guarantee. In case of a defect the original sales slip will be needed to make use of the guarantee. Repair works covered by the guarantee may only be performed by Schambeck SFD GmbH or licensed distributors.

The following cases are not covered by the guarantee:

- Improper use (e. g. capacity overload, use of not approved tools) of the RI2000 detector
- Parts which are liable to aging or abrasion like lamps, valves, heater cartridges or flow cells
- Damages caused by use of force or not approved tools
- Damages which result from improper use due to non-observance of the operation manual, the use under abnormal conditions or improper maintenance
- Defects resulting from the use of third-party parts which are not approved by Schambeck SFD GmbH
- Instruments which are modified after purchasing by the customer
- Normal abrasion
- Fully or partial disassembled refractive index detectors

8 PARTS INCLUDED IN THE DELIVERY

Quantity	Description
1 EA	Refractive Index Detector RI2000
1 EA	Stainless steel capillary, 0.25 mm inner diameter, 1.59 mm outer diameter (for sample entry)
1 EA	Stainless steel capillary, 1.00 mm inner diameter, 1.59 mm outer diameter (for sample exit)
1 EA	PTFE tube, 1.59 mm inner diameter, 2.80 mm outer diameter (for sample outlet)
2 EA	Screw connection (for sample entry and sample exit)
1 EA	Power cable
2 EA	Fuses (0.5 A, slow)
2 m	Signal cable, 2-wired, shielded
1 EA	Hex-wrench (for adjustment of the mirror, ∅ 2.5 mm)
1 EA	Operation & Service Manual - CD

9 FRONT PANEL AND KEYBOARD

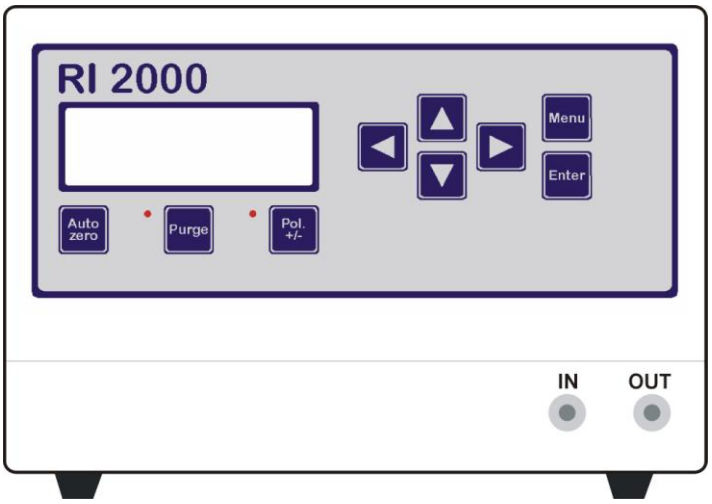

9.1 THE DISPLAY

The RI2000 refractive index detector is equipped with a liquid crystal display to show the current detector signal as well as system parameters. This display contains four lines with 20 characters each.

```
  Temp:      28.5 °C
OptBal:      13.4 %%
SIGNAL:      31.7 mV
NormMode  >> (E,⊞,↵)
```

Line 1 shows the current temperature of the optical bench (in °C).

Line 2 shows the optical balance (in %%).

Line 3 shows the current detector signal (in mV).
The value shown here is identical to the digital output signal and to the analog signal which can be recorded at the recorder output.

Line 4 This line shows the status of the RI2000 detector. Every few seconds the displayed parameter changes. By this you can get a complete overview of all parameters in a short time.

9.2 The AutoZero Button

By pressing the AutoZero button the detector signal is internally set to Zero. To return to the formel (unmodified) signal, press the AutoZero button for approx. three seconds.

9.3 The Purge Button

To flush the reference chamber of the flow cell with mobile phase press the PURGE button once. If the purge mode is activated a red LED will light up. Press the PURGE button once again to deactivate the purge mode. Now the mobile phase will flow only through the sample chamber of the flow cell. See chapter 13 for more details about the flow paths inside the detector.

9.4 The Button Pol +/-

By pressing this button the polarity of the detector signal will be changed. A negative signal like e. g. – 5mV will be transformed into a positive signal + 5 mV when the polarity mode is activated. A red LED will light up when this mode is activated.

9.5 The Buttons ArrowLeft (◄) and ArrowRight (►)

The arrow buttons have several functions. If only one button is pressed you can change the settings of one parameter to smaller (◄) or bigger (►) values. If both buttons are pressed together for about three seconds the detector will be set to service mode. This mode is used for detector diagnostics and maintenance purposes.

9.6 The Buttons ArrowUp (▲) and ArrowDown (▼)

If different options for one parameter are available you can select the desired option by using these arrow buttons. ArrowUp (▲) will switch to higher values and ArrowDown (▼) to smaller values. If the marker function is activated you can send a

marker signal to the recorder output by pressing the ArrowUp (▲) button (see chapter 14.7).

9.7 The Menu Button

By pressing this button you can select a special sub-menu or discard changes you performed on a parameter.

9.8 The Enter Button

Press the ENTER button to open the selected sub menu and to accept changes you performed on a parameter.

9.9 The IN port

This is the entrance for the mobile phase coming from the column. Connect the capillary coming from the column to this port using screw connectors.

9.10 The OUT port

This is the exit of the mobile phase. Connect you waste bottle to this port using the PTFE tube.

NOTE

Use only capillaries with an inner diameter of 1 mm for the exit of the mobile phase. By this blockage can be prevented. Make also sure that the pressure limits for the flow cell (6 bar, 0.6 MPa) and the valve (2 bar, 0.2 MPa) are not exceeded. If the refractive index detector is used in combination with other detectors, make sure the refractive index detector is the last detector in the row.

10 THE BACK SIDE OF THE RI2000

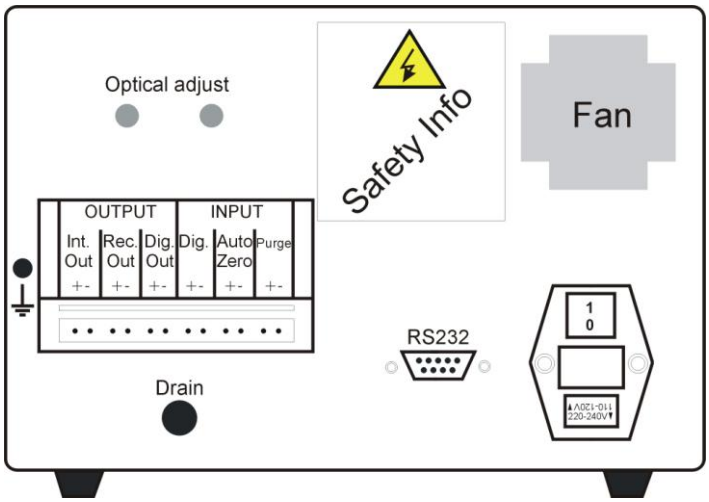

10.1 OUTPUT-CONNECTORS

The RI2000 refractive index detector has two analog and one digital signal output.

10.1.1 THE INTEGRATOR SIGNAL OUTPUT

If you want to record your data using an analog integrator device, connect the integrator using the shielded signal cable to the integrator output (Int. Out). Make sure that the polarity (+/-) is correct. This analog signal can also be recorded using an external analog-digital converter.

10.1.2 THE RECORDER SIGNAL OUTPUT

To record data using an analog recorder, connect the device using the shielded signal cable to the recorder output (Rec. Out). Make sure that the polarity (+/-) is correct. This analog signal can also be recorded using an external analog-digital converter.

10.1.3 THE DIGITAL OUTPUT

The RI2000 gives a TTL pulse in case of an intensity alarm. This pulse is given to the digital output (Dig. Out). If you want to record the digital detector signal you need to use the RS232 serial connector.

10.2 INPUT-CONNECTORS

The RI2000 refractive index detector has three digital (TTL) inputs. These can be used to control the system externally.

10.2.1 THE EXTERNAL START SIGNAL

Use the digital input connector (Dig.) to connect an external start signal (e. g. generated by an autosampler or a manual injector) to the instrument.

10.2.2 THE EXTERNAL AUTOZERO SIGNAL

Use this input connector (AutoZero) to connect an external AutoZero signal to the instrument.

10.2.3 THE EXTERNAL PURGE SIGNAL

Using this connector (Purge) you can use an external signal to activate the detector's purge mode. Using this input the purge mode can be activated for example by using the relais option of your data interface.

NOTE

All TTL signals handled by the RI2000 detector use a TTL level which is based on instrument's ground potential.

10.3 THE RS232 PORT

The RS232 port can be used to acquire the detector's signal using a personal computer as well as to control the instrument using the computer. To communicate with the detector using a computer you need to use a certain protocol which is explained in chapter 15.6 of this manual.

10.4 Mass Screw

Use the mass screw to connect the shielding of the analog signal cable to the detector's chassis. This will result in a smoother detector signal. If you are using an external data interface for data acquisition make sure the interface ground and the detector's ground are on the same potential to reduce noise in the detector signal.

10.5 Optical Adjust

The two black caps on the back side of the detector cover holes in the detector's housing. If needed the optical system of the detector can be adjusted using the hex-wrench which came with the instrument. To adjust the mirror, remove these caps and turn the adjustment screws *carefully*.

10.6 Drain

In case of a leakage inside the housing mobile phase can leave the housing using the tube. You might connect an additional waste tube to this outlet.

10.7 Mains Adaptor

Use the power cable which was delivered with the detector to connect the instrument to the power supply. Make sure that the correct voltage is selected before connecting to the mains. To high voltage will damage the instrument.

10.8 Fuses

Next to the mains plug you can find the instrument's fuses. The type of this fuse depends on the voltage the instrument is operated.

220 V:	2 x 500 mA, slow
110 V:	2 x 1000 mA, slow

Inside the housing is an additional internal fuse (1 x 500 mA, slow).

11 INSTALLATION OF THE RI2000

11.1 CONNECTING THE DETECTOR TO THE CHROMATOGRAPHY SYSTEM

Connect the INLET on the front of the detector to the capillary which comes from the column of you chromatography system. To attach the column to the detector use a 1/16” stainless steel capillary with 0.25 mm inner diameter.

Connect the 1/16” stainless steel capillary with 1 mm internal diameter to the PTFE tube and the OUTLET port of the instrument. Use the screw connections to fix the capillaries to the INLET and OUTLET port.

Place the free end of the PTFE tube in a bottle for solvent waste. The droplets leaving the tube should run along the bottles wall and not fall down. The waste bottle and the refractive index detector should be positioned at the same hight level.

If you need a solvent mixture to perform your analytical separation it is recommended to mix the different components manually before using the solvent. The use of a gradient pump to generate a solvent mixture is not possible as the mixture generated by the gradient pump is not consistent. Small changes in the solvent compositions will result in unstable detector signals.

It is also recommended to degas the solvents before use with a refractive index detector as this will result in a more stable detector signal.

NOTE

Before dispatch of the instrument the flow cell was purged first with ethanol followed by air. However there are still some rests of ethanol in the flow cell. For transportation or long time storage of the instrument it is recommended to purge the detector with ethanol and air.

NOTE

The flow cell is built of specialized optical glass which is sensitive to pressure. The maximum pressure for the flow cell is **6 bar** (**0.6 MPa**). If you want to use several detectors is series make sure that the refractive detector is the last one in the row to prevent damages of the flow cell due to high pressure.

11.2 Connection to an Analog Data System

Use a small screwdriver to connect the signal cable to one of the two pin connectors which are delivered with your instrument. Connect the signal cable either to the integrator output (Int. Out) or to the recorder output (Rec. Out) of the detector if you want to use an analog integrator or recorder as well as an analog data system to collect data. Make sure that the polarity (+/-) of the connection is correct.

NOTE

The signal coming from the integrator output (Int. Out) is a voltage between -1 V and 1 V. In case of a signal gain of 1 set in the detector parameters the signal at the recorder output (Rec. Out) is the same.

If you need a very high sensitivity it is recommended to use the recorder output (Rec. Out) as you can use the instrument's internal signal amplifier which might amplify the detector signal up to 16 times.

11.3 Connection to a Digital Data System (PC)

The RS232 port on the back side of the RI2000 refractive index detector can be used for data acquisition as well as instrument control. Using the RS232 port for external instrument control you might activate / deactivate the purge mode, send an external start / marker signal and AutoZero signal.

To communicate with the RI2000 detector using the serial interface you will need a special software package which utilizes a special communication protocol. Details of this protocol you will find in chapter 15.6 of this manual.

There is a software package available which allows the data acquisition with the RI2000 detector. The data can be saved in user defined file formats for later data treatment using chromatography software packages like *PeakSimple* or *APEX*.

12 PRINCIPLE OF DETECTION

The RI2000 refractive index detector acts as a differential refractometer which measures the deflection of a light beam as a result of different refractive indices of solutions in the reference and the sample chamber of the flow cell.

The beam of a tungsten lamp passes a convex lens and two slip apertures (called slit 1 and slit 2) before reaching a second convex lens. After this the light passes the flow cell which is diagonally separated into two chambers (sample and reference chamber). Behind the flow cell a mirror is placed which reflects the beam through the flow cell, the second convex lens and the second slit aperture (slit 2) toward a light sensor.

The light sensor is placed under the light source and consists of two photo diodes. The both diodes generate a current which is proportional to the light intensity reaching the sensor's surface.

12.1 THE OPTICAL SYSTEM OF THE RI2000

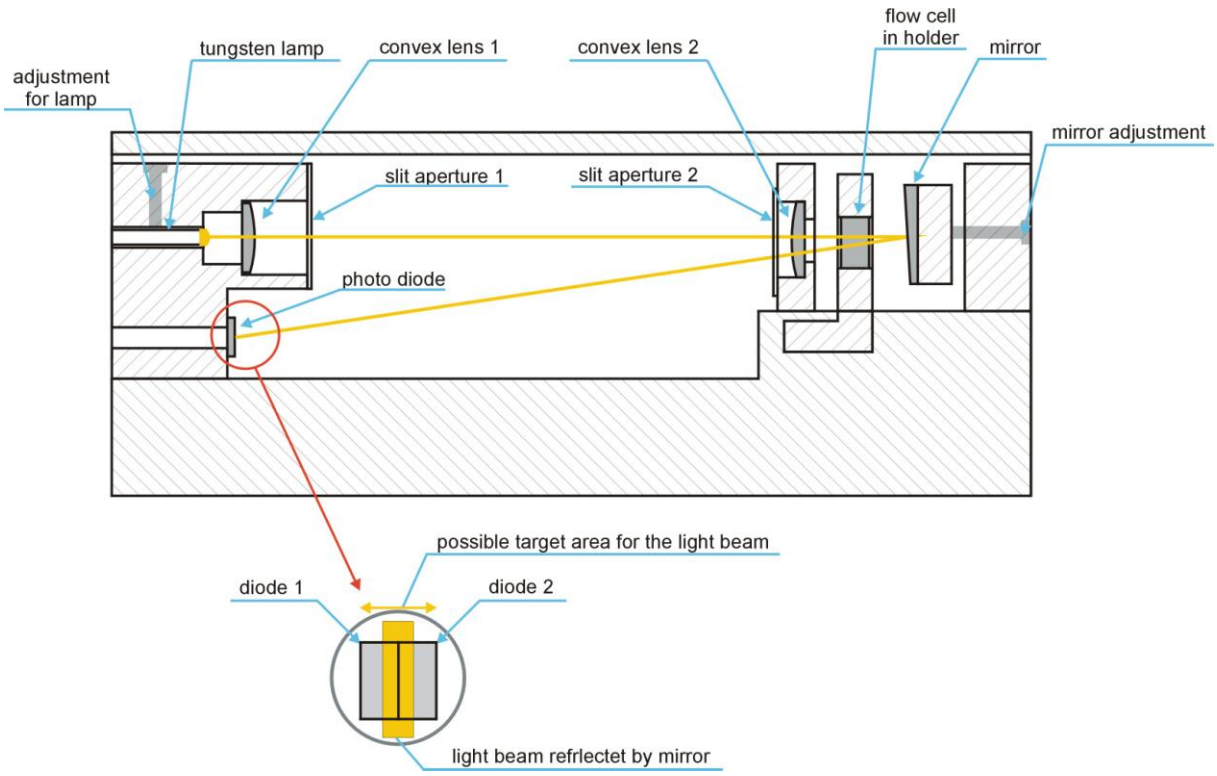

13 Flow Paths in the RI2000

13.1 Measuring Mode

If the purge mode is disabled (red LED is off) the valve is switched that way that the mobile phase does not pass the reference chamber of the flow cell. The mobile phase comes from the column and enters the optical system through the INLET port and a heat exchanger to ensure that the measurement is performed at constant temperatures as the refractive index is highly dependent on the temperature. The temperature for the optical bench can be selected in the range from 35 °C to 55 °C.
After passing the heat exchanger the mobile phase reaches the sample chamber of the flow cell. Leaving the flow cell the mobile phase flow again passes the heat exchanger going towards a T-connector which is connected with the purge valve. After passing the valve the liquid leaves the detector passing the OUTLET port.

The following figure illustrated the flow path in measuring mode.

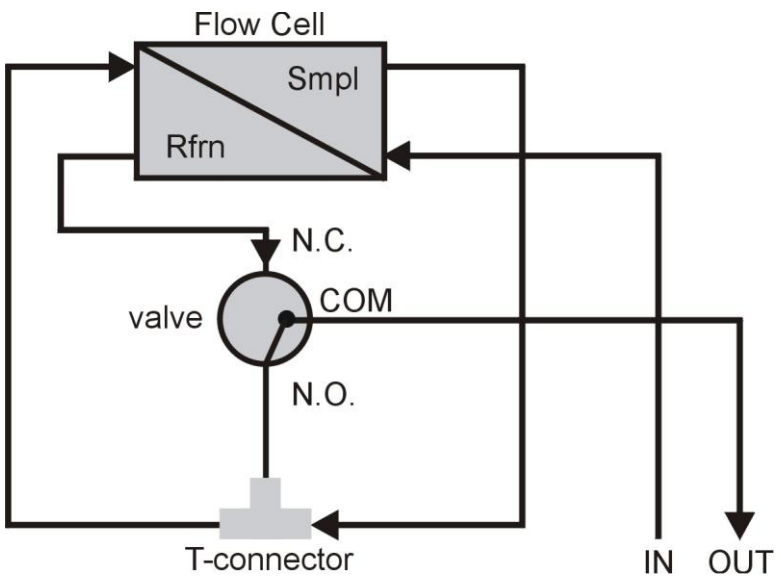

13.2 PURGE MODE

The purge mode is used to flush the reference chamber or the flow cell with fresh mobile phase (solvent). If the purge mode is activated the red LED will light up. The mobile phase now passes the reference chamber of the flow cell.

After leaving the column the phase enters the detector passing the INLET port. After this the mobile phase enters the optical bench passing the heat exchanger going towards the flow cell. Now the stream enters the sample chamber of the flow cell. Leaving the flow cell, passing the heat exchanger again the liquid reaches the T-connector and after this it reaches the reference chamber of the flow cell. Now the reference chamber is flushed by mobile phase. Leaving the flow cell the liquid is guided through the OUTLET port out of the detector.

The purge mode should be activated regularly to ensure that the reference chamber contains mobile phase (solvent) which is similar to the mobile phase passing the sample chamber.

After purging the detector for a certain time you can start your measurement after deactivation of the purge mode by pressing the PURGE button once again.

The following figure illustrates the liquid stream in purge mode.

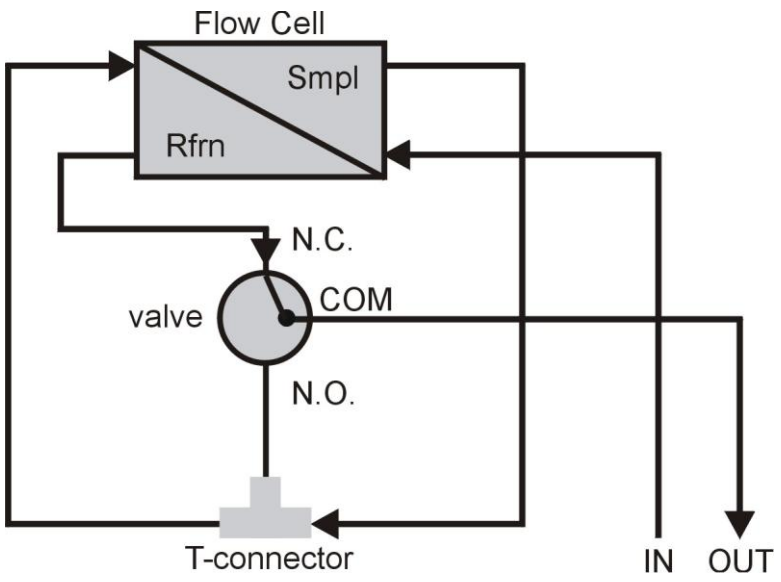

The purge mode should be activated until a stable baseline is reached. After switching back to the measuring mode it might be necessary to wait once more until the baseline becomes stable.

14 OPERATING THE RI2000 DETECTOR

14.1 THE INITIALIZATION STAGE

The RI2000 refractive index detector does not consume any energy when it is switched off. The mains switch can be found on the back side of the instrument. After switching on the detector starts to initialize the internal micro controller and a testing procedure starts to check several system parameters. During this test the logo is shown in the display, the LEDs will light up for a short time and an acoustical signal will occur. The initialization procedure will be finished after approx. six seconds and the detector will switch automatically to the normal measuring mode (NormMode).

If you want to check the functionality of the internal keypad you can perform two different tests while the logo is shown:

1. Shortly press one of the buttons on the keypad. The detector will switch to normal measuring mode (NormMode) without waiting.
2. Press and hold one of the buttons. In this case the detector will not proceed to normal measuring mode. Instead of this it will show the logo until another button is pressed.

14.2 The Normal Measuring Mode (NormMode)

After performing the internal test procedure the detector will switch automatically to the normal measuring mode (NormMode). Now internally several tasks are running:

- Data acquisition
- Data processing
- Data output
- Internal instrument control

The display will show the following information:

```
  Temp:      28.5 °C
OptBal:      13.4 %%
SIGNAL:      31.7 mV
NormMode  >> (E,⊞,◄┘)
```

Line 1 shows the current temperature of the optical bench in [°C].

Line 2 shows the optical balance between the two photo diodes of the light sensor in [%%] which corresponds with the relative position of the light beam on the surface of the light sensor.

Line 3 shows the current detector signal or error messages (in case of intensity alarms). The shown signal corresponds with the signal which can be measured at the integrator output (IntOut). In the normal measuring mode (NormMode) the signal is displayed with one decimal.

Line 4 is the status line and shows the current status of different detector parameters. Several parameters are shown. Every few seconds the display will change that you will have a complete overview of all parameters in a short time.

The following parameters are shown:

- SetHeating,°C Temperature control
- SigSMOOTH Signal smoothing, internally
- RecRANGE Recorder output settings
- RecOFFSET, mV Signal offset for recorder output
- RecMARKER Marker settings
- ComRS232 Settings for serial RS232 port

Another function of the status line is the input of new parameter settings by the user. The symbol ❖ represents the four ARROW keys (◀ ▶ ▼ ▲), ↵ stands for the ENTER button.

Using the menu button you can choose between several sub-menus which are accessed when pressing the ENTER key after selection. To adjust the settings for the desired parameters use the ARROW buttons. To accept new settings press the ENTER button. To discard new settings and keep the old value press the MENU button.

14.3 Temperature Settings

Since the refractive index is highly depending on the temperature the temperature of the optical bench of the RI2000 refractive index detector can be controlled by the micro controller. To set the desired temperature press the MENU button until the following status line is displayed.

```
  Temp:      28.5 °C
OptBal:      13.4 %%
SIGNAL:      31.7 mV
:SetHeating,°C   OFF
```

Currently the temperature control is switched OFF. The optical bench is operated at ambient temperature plus additional 7 °C caused by internal heating resulting from different electronic components which heat up when operated. As a result of this the temperature can be controlled in a range from 35 °C up to 55 °C only. To change the temperature setpoint press the ArrowUp (▲) to switch to higher temperatures or use the ArrowDown button (▼) to select a lower temperature. If you set the temperature control to OFF the optical bench is operated at ambient temperature plus 7 °C.
Pressing the ENTER button accepts the new setting. In the normal measuring mode an asterisk (*) in the left top corner of the display indicates the activity of temperature control.

```
* Temp:      35.0 °C
OptBal:      13.4 %%
SIGNAL:      31.7 mV
:SetHeating,°C   +35
```

The temperature sensor is constantly controlled by the internal firmware of the instrument. It is not possible to activate the heating when one of the following reasons occurs:

- The temperature sensor does not work or is not connected. In this case the error message “noTS” will appear in the display.
- The current temperature is below 9 °C or above 64 °C. In this case the error message “!” will be shown in the display and a periodic acoustic signal occurs. The acoustic signal will stop when the temperature reaches the range between 9 °C and 64 °C.

NOTE

Should the temperature control fail due to an electronic malfunction the heating will be switched of automatically at 72 °C by a thermo fuse (see chapter 16.8).

14.4 Setting Signal Smoothing

To adjust the grade of smoothing of the detector signal press the menu button until the following status line is shown in the display.

```
* Temp:      35.0 °C
OptBal:      13.4 %%
SIGNAL:      31.7 mV
:SigSMOOTH       RAW
```

There are four different modes for signal smoothing:

- **RAW** No signal smoothing
- **FAST** Signal smoothing by calculating the average in a time interval of 0.4 seconds
- **MEDIUM** Signal smoothing by calculating the average in a time interval of 0.8 seconds
- **SLOW** Signal smoothing by calculating the average on a time interval of 1.6 seconds

The ArrowUp button (▲) changes to the next faster way of signal smoothing while the ArrowDown button (▼) switches to the next slower mode. To accept the new settings press the ENTER button.

14.5 Setting Recorder Range – Signal Amplification

To adjust the signal amplification press the MENU button until you can see the following status line in the display.

```
* Temp:      _____35.0 °C
OptBal:      _____13.4 %%
SIGNAL:      _____31.7 mV
:RecRANGE              =1
```

If the mode RecRANGE is activated it allows to amplify or attenuate the detector signal at the recorder output (RecOut).

If the amplification mode is set to “1/1” the signal at the recorder output (Rec. Out) corredsponds to the signal at the integrator output (Int. Out).

By pressing the buttons ArrowUp (▲)you can switch to the next stronger amplification mode of the signal:

$$1 \;▲\; {}^{2}/_{1} \;▲\; {}^{4}/_{1} \;▲\; {}^{8}/_{1} \;▲\; {}^{16}/_{1} \;▲\; {}^{32}/_{1} \;▲\; {}^{64}/_{1} \;▲\; {}^{128}/_{1}$$

Using the ArrowDown (▼) button you can change the amplification to lower grades:

$$1 \;▼\; {}^{1}/_{2} \;▼\; {}^{1}/_{4} \;▼\; {}^{1}/_{8} \;▼\; {}^{1}/_{16} \;▼\; {}^{1}/_{32} \;▼\; {}^{1}/_{64} \;▼\; {}^{1}/_{128}$$

To accept your settings press the ENTER button.

14.6 Setting Recorder Offset and Recorder Extent

In this sub menu you can adjust the recorder offset or the recorder extent. If the recorder adjust is activated a certain (defined) voltage will be added to each data point recorded by the detector. By setting the recorder extent you may define a maximum for the detector signal.

14.6.1 Recorder Extent

To adjust settings press the MENU button until the following status line is shown in the display.

```
* Temp:      _____35.0 °C
OptBal:      _____13.4 %%
SIGNAL:      _____31.7 mV
:RecLIMIT,mV        10
```

By pressing the buttons ArrowUp (▲) and ArrowDown (▼) you can either add a static voltage to each data point recorded by the detector (detector offset) or define a maximum voltage for the detector signal (detector extent).

There are four different settings possible:

10	the maximum detector signal will be ±10 mV
100	the maximum detector signal will be ±100 mV
1000	the maximum detector signal will be ±1000 mV
EXTN	the maximum detector signal will be ±1200 mV

The selection will be accepted by pressing the ENTER button.

14.6.2 Recorder Offset

Depending on the used date acquisition system it might be necessary to add a constant voltage to each data point to ‘shift’ the detector signal to a voltage range which can be processed by the data acquisition system. You can define a static

voltage which is added automatically to the displayed detector signal using the 'RecOffset' option. This is reasonable for example in the case of negative baseline drift in connection with a data system which cannot handle negative detector signals. To adjust the recorder offset press the buttons ArrowUp (▲) and ArrowDown (▼) until the desired voltage is shown in the status line of the display. The voltage which is added to the current detector signal depends - beside the selection of the detector offset - on your selection of the detector limit (see chapter 14.7.1).

```
* Temp:      35.0 °C
OptBal:      13.4 %%
SIGNAL:      31.7 mV
:RecOFFSET,%      50
```

The offset voltage which results from different parameter settings can be found in the following table:

RecOFFSET,% =	RecLIMIT, mV=10 Spannungswert [mV]	RecLIMIT, mV=100 Spannungswert [mV]	RecLIMIT, mV=1000 Spannungswert [mV]	RecLIMIT, mV=EXTN Spannungswert [mV]
-50	-5.0	-50.0	-500.0	-600.0
-10	-1.0	-10.0	-100.0	-120.0
-5	-0.5	-5.0	-50.0	-60.0
-1	-0.1	-1.0	-10.0	-12.0
0	0	0	0	0
1	+0.1	+1.0	+10.0	+12.0
5	+0.5	+5.0	+50.0	+60.0
10	+1.0	+10.0	+100.0	+120.0
50	+5.0	+50.0	+500.0	+600.0

To accept the new setting, press the ENTER button. To leave the mode without accepting the changes press the MENU button.

14.7 MARKERS

The RI2000 refractive index detector offers the option to mark certain events during the analytical run using a marker signal. If a marker is set, the detector will send a signal which represents ±1/8 of the RecRange set by the user for a short moment. In the chromatogram this marker will appear as a spike. To modify the settings concerning marker signals press the MENU button until the following status line is displayed:

```
* Temp:      35.0 °C
OptBal:      13.4 %%
SIGNAL:      31.7 mV
:RecMARKER     NONE
```

To activate the marker option, change the settings from NONE (option is not active) to ARROW↑. Accept the changes by pressing the ENTER button.

```
* Temp:      35.0 °C
OptBal:      13.4 %%
SIGNAL:      31.7 mV
:RecMARKER   ARROW↑
```

If this function is activated like this a marker signal can be sent to the recorder output each time the button ArrowUp (▲) is pressed during the analytical run. When the marker signal is sent to the detector you will hear an acoustic signal.

14.8 Settings for Serial Port (RS232)

To modify settings concerning the digital communication using the serial RS232 port press the MENU button until the status line in the display changes to the following.

```
  Temp:      28.5 °C
OptBal:      13.4 %%
SIGNAL:      31.7 mV
:RS232Data      LOCK
```

Using this function ComRS232 you may adjust the parameters for the serial data interface. If the mode is set to “LOCK” no detector is sent to the RS232 port. Use this setting only in that case you want to record your data using an analog data system. Use the buttons ArrowUp (▲) and ArrowDown (▼) to select the frequency for data output. You can choose between two modes:

1 Hz	One data point per second is sent to the RS232 port.
2 Hz	Two data points per second are sent to the RS232 port.
10 Hz	Ten data points per second are sent to the RS232 port.
LOW	(=0.4 Hz) One data point is sent to the RS232 port every 2.5 seconds.

```
  Temp:      28.5 °C
OptBal:      13.4 %%
SIGNAL:      31.7 mV
:RS232Data      1HZ
```

```
  Temp:      28.5 °C
OptBal:      13.4 %%
SIGNAL:      31.7 mV
:RS232Data     10HZ
```

To accept you settings press the ENTER button. Pressing the MENU button will discard any new input.

14.9 DATA FORMATS

The contents of data packages sent by the RI2000 refractive index detector might be selected by the user. A data package sent by the detector contains at least the current detector signal (the unit for the detector signal is micro volt (µV)). Optional a counter and status messages can be added to the data package.

To configure the content of a data package press the MENU button until the option RS232Attach is shown in the status line of the display.

```
  Temp:  _____28.5 °C
OptBal:  _____13.4 %%
SIGNAL:  _____31.7 mV
:RS232Attach    BOTH
```

Now press the ArrowUp (▲) or ArrowDown (▼) button to change the settings. The following options are available:

- **NONE** No additional information is transmitted. Only the detector signal is sent to the serial port
- **COUNT** A counter (incremented number) is added to the data package
- **NOTICE** Status messages are added to the data package before sending to the serial port
- **BOTH** The counter and status messages are added to the data package

More details regarding the communication with the RI2000 refractive index detector using the serial (RS232) port can be found later in this manual.

14.10 Menu Structure in Normal Measuring Mode (NormMode)

NormMode

In this mode the user can adjust several parameter for the operation of the RI2000 refractive index detector.
The NormMode is used to:
- display temperature [°C], optical balance [%%] and the current detector signal [mV]
- modification and control of instrument's settings

In this mode the button Menu is used to switch between different sub-menus the button Enter is used to accept changes to parameters. The arrow buttons ◀ ▶ ▲ ▼ are used to change between several possiple options.

6 sekonds after switching on the RI2000 refractive index detector the logo will disappear from the display and the instrument switches to normal measuring mode.

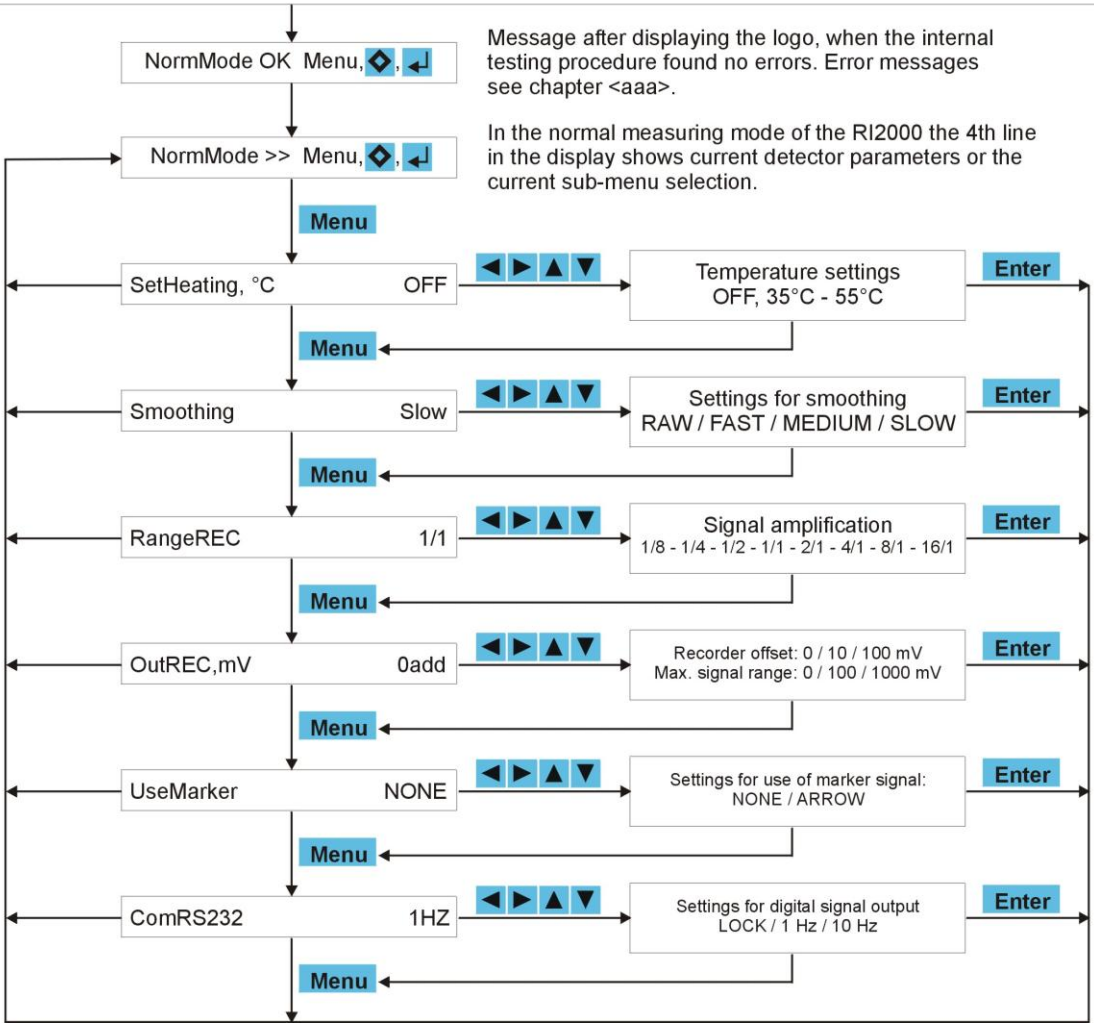

15 THE SERVICE MODE

Since version 3.x the internal firmware of the RI2000 refractive index detector contains the service mode. This mode allows the user to check more detailed system parameters for example in case of a malfunction of the instrument to get more detailed information to call the technical support.

To activate the service mode press the keys ArrowLeft (◄) and ArrowRight (►) at the same time for about three seconds. The display will change from normal measuring mode (NormMode) to service mode (ServMode).

```
  Temp: +0028.500 °C
OptBal: +0013.425 %%
SIGNAL: +0031.700 mV
ServMode >>    (E,◄┘)
```

The numerical values for temperature, optical balance and the current detector signal are now displayed with three decimals. In this mode the status line is used to navigate between several sub menus.

You might choose between:

- **NormMode** switch back to normal measuring mode
- **SwHwInfo** switch to Software/Hardware information
- **ViewFine** switch to view fine system analysis mode
- **AdjuDACs** switch to adjust mode for digital analog converter
- **Calibr'n** switch to calibration mode

To switch back to the normal measuring mode press the MENU button until the NormMode statement is shown in the status line.

```
  Temp: +0028.500 °C
OptBal: +0013.425 %%
SIGNAL: +0031.700 mV
ServMode >> NormMode
```

Now press the ENTER button to leave the service mode.

15.1 Firmware Information

If you need detailed information about your instrument such as the firmware version number or the instrument's serial number press the MENU button in service mode until the menu SwHwInfo is shown in the status line.

```
  Temp: +0028.500 °C
OptBal: +0013.425 %%
SIGNAL: +0031.700 mV
ServMode >> SwHwInfo
```

Then press the ENTER button. The display will show the currently running firmware version and the serial number of the instrument. The full information can be found in line two of the display.

```
 Schambeck SFD GmbH
RI2000 V4.0 A8888801
SIGNAL: +0031.700 mV
ServMode    SwHwInfo
```

To return to the former display press the MENU button.

15.2 ViewFine Mode

To check internal settings of the refractive index detector the view fine mode can be activated. To access this mode press the MENU button until the sub menu ViewFine is shown in the status line.

```
  Temp: +0028.500 °C
OptBal: +0013.425 %%
SIGNAL: +0031.700 mV
ServMode >> ViewFine
```

Now press the ENTER button and the display will change to the following information:

```
Check Source Unit ↵
-0010 5030 2510 2520
SIGNAL: +0031.700 mV
ServMode >> ViewFine
```

The values in line two represent four different voltages measured by the instrument. To get an information which voltage is shown in which column press the ENTER button. The display will change to the following:

```
Check Source Unit ↵
 Diff Summ Smpl Rfrn
SIGNAL: +0031.700 mV
ServMode >> ViewFine
```

To return to the former view press the ENTER button again.

The displayed shortcuts represent the following voltages:

- **Diff** Difference voltage. This is the difference between the voltages resulting from measuring light intensity on the sample and the reference side of the light sensor.

- **Summ** Sum-voltage. This is the sum of the two voltages measured on the sample and the reference part of the light sensor.

- **Smpl** Sample voltage. Corresponding to the light intensity on the sample side of the light sensor.

- **Rfrn** Reference voltage. Corresponding to the light intensity on the reference side of the light sensor.

All voltages are displayed in [mV]. The value of the difference voltage can be positive or negative while the values of the other three voltages have only positive values.
The sample voltage and the reference voltage can also be measured at two test points on the circuit board using a multimeter.

The sum and difference voltages are calculated according to the following formulas.

$$Summ = Smpl + Rfrn$$
$$Diff = Smpl - Rfrn$$

15.3 Adjusting Digital – Analog – Converters

Press the MENU button until the sub menu “AdjuDACs” is shown in the display.

```
  Temp: +0028.500 °C
OptBal: +0013.425 %%
SIGNAL: +0031.700 mV
ServMode >> AdjuDACs
```

Press the ENTER button to access the mode to adjust a digital to analog converter. The display will change to the following view:

```
Set both INT&REC on
fixValue:      _____ mV ↵
SIGNAL: +0031.700 mV
ServMode    AdjuDACs
```

This function allows the user to apply a defined signal to the recorder output and the integrator output.

NOTE

Make sure that the signal amplification for the recorder output is set to 1/1 before using this function. Otherwise you have to remember the amplification factor.

This voltage can be checked using a multimeter or may be used to test the used data system. By pressing the ENTER button you can go stepwise through a list of different voltages.

0 mV ↵ 1000 mV ↵ 1200 mV ↵ 0 mV ↵ -1000 mV ↵ -1200 mV

Pressing the ENTER button once will show the following information in the display:

```
Set both INT&REC on
fixValue:  0000 mV ↵
SIGNAL: +0031.700 mV
ServMode    AdjuDACs
```

Now the signal at the integrator output and the recorder output is exactly 0 mV. Press the ENTER button again to switch to the next voltage. The current voltage which is applied to the signal output is shown in the display.

15.4 CALIBRATING THE RI2000

The calibration mode of the RI2000 detector is used to calibrate the signal response to a certain sample concentration. This step is needed if the instrument is used to perform quantitative analysis. The detector is calibrated when shipped to the customer. Usually a re-calibration has to be performed after modifications of the optical system only. Under normal operation conditions a re-calibration of the RI2000 is not needed.

To calibrate the signal response of the instrument you need a solution of exactly **343 mg glucose in 100 mL distilled water** which is used as standard. The refractive index of this solution is known and saved as an internal constant in the detectors firmware.

The first step of the calibration is purging the reference chamber and the sample chamber of the flow cell with distilled water. In the second step the sample chamber is filled with the standard solution. At this point the theoretical detector signal is 500 mV. The real detector signal is recognized by the firmware and the calibration factor to reach the theoretical 500 mV is calculated and saved as internal constant.

The correlation between the refractive index and the detector signal is:

$$\mathbf{1\ mV \equiv 1\ \mu RIU}$$

15.4.1 HOW TO CALIBRATE…

To activate the calibration mode press the MENU button until the statement “Calibr’n” is shown in the status line.

```
  Temp: +0028.500 °C
OptBal: +0013.425 %%
SIGNAL: +0031.700 mV
ServMode >> Calibr’n
```

By pressing the ENTER button the calibration mode is opened. The following information will be shown in the display.

```
3-Steps-Calibration:
yourTest toGet 500mV
SIGNAL: +0031.700 mV
ServMode    Calibr'n
```

To start the calibration press the ENTER button. For the first step of calibration the valve will be switched into purge mode (the red purge LED will light up). The display will show the line “nowWATERwash”.

```
Step 1/3  PurgeWater
nowWATERwash, then↵
SIGNAL: +0031.700 mV
ServMode    Calibr'n
```

At this point flush the reference chamber and the sample chamber with at least 5 mL distilled water. It is recommended to use a disposable syringe during the calibration to press the solutions into the INLET port. When the first step is finished, press the ENTER button. The display will change to the following view:

```
Step 1/3  PurgeWater
-0100 5030 ...WAIT !
SIGNAL: +0033.952 mV
ServMode    Calibr'n
```

The signal is recorded and checked. In the display line two the difference voltage (Diff, -0100 in this example) and the sum voltage (Summ, 5030 in this example) is shown.

If the signal is stable the display view will change to:

```
Step 2/3  InjectTest
nowTESTinto, then ↵
SIGNAL: +0471.935 mV
ServMode    Calibr'n
```

The valve is switched automatically into the measuring position. Now flush the sample chamber of the flow cell at least three times with the standard solution before pressing the ENTER button to proceed with step two of the calibration process. After pressing the ENTER button the detector registers the current signal while the display will show the different voltages as described before.

```
Step 2/3  InjectTest
-0890 5060 ...WAIT !
SIGNAL: +0471.935 mV
ServMode    Calibr'n
```

If the signal is stable the calibration factor is calculated and saved. The success of the calibration process is confirmed by a displayed message.

```
Step 3/3  InjectTest
Calibration was OK↵
SIGNAL: +0492.980 mV
ServMode    Calibr'n
```

Press the ENTER button to finish the calibration process. The new calibration factor is shown in the upper right corner of the display. The four measured and calculated voltages are shown in the display according to the ViewFine mode (see chapter 15.2). The calibration is now finished.

```
 set new SPAN  02803
-0010 5030 0890 5060
SIGNAL: +0492.980 mV
ServMode    Calibr'n
```

In case of a problem during the calibration, an error message will be displayed.

```
Step 3/3 SaveSession
Calibration failed
SIGNAL: +0492.980 mV
ServMode    Calibr'n
```

In this case the RI2000 uses the old calibration factor for further measurements. Repeat the process of calibration as described before.

15.5 SERVMODE OVERVIEW

ServMode

This mode allows the user to get detailed information about the current status of the RI2000.
If the calibration mode is not entered no changes can be applied to the instrument.

Features of the service mode:

- more detailed display of temperature (°C), optical balance (%%) and detector signal (mV)
- system information (such as firmware version and serial number of the instrument)
- display of optical bench parameters (reference / sample voltages, sum- and difference voltage)
- calibration of the detector response (3-step-calibration)

In the service mode only the buttons **Menu** and **Enter** are active to select the different sub-menus and to accept new settings.

To discard changes and to leave a sub-menu press the **Menu** button.

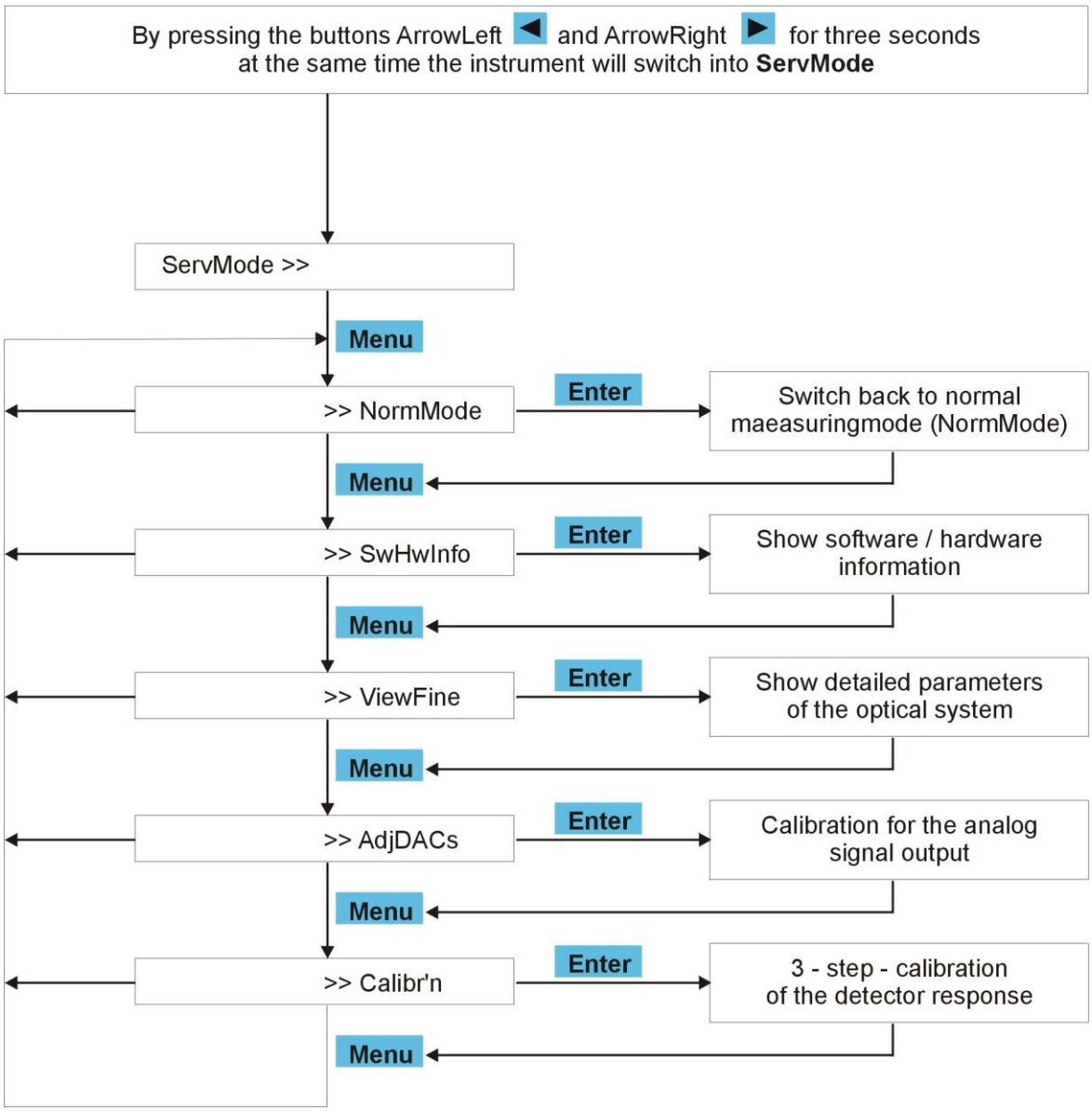

15.6 Serial Communication

The serial port (RS232) is used for the direct control of the RI2000 refractive index detector and data acquisition. Using the serial port for data acquisition no data interface is needed. Only a direct cable connection and software, which is able to communicate with the RI2000, is needed. Possible communication software solutions are: Acquire2000, SFD.HPLC or HyperTerminal (which comes with Microsoft Windows). Custom made software solutions such as Excel macros or the implementation in existing software solutions are possible, too.

15.7 Configuration and Hardware of the Serial Port

The RS232 port of the RI2000 refractive index detector is configured as described below:

- Signal cable: TXD - pin 2 / RXD - pin 3 / GND – pin 5
- Data transfer: 9600 baud, 8 bit, no parity, 1 start bit, 1 stop bit
- No Handshake, no data flow control
- ASCII coded

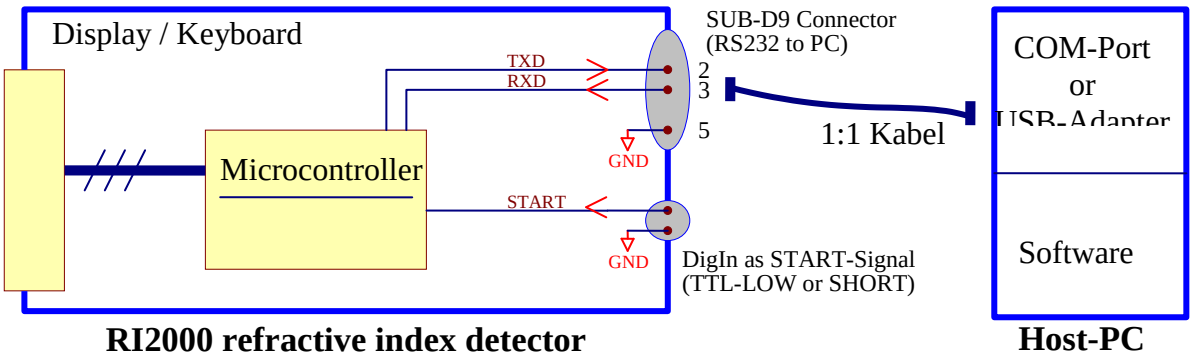

Firmware

All components participating on the data communication are shown in the figure above.

15.8 SETTINGS FOR DATA COMMUNICATION IN FIRMWARE VERSION 4.0

Using the key pad of the RI2000 the configuration of the data communication can be changed. The parameter RS232Data defines the data rate which is used for data communication. Possible settings are:

- LOCK serial port blocked, no data communication *no index*
- 1HZ 1 Hz, 1 data point per second *index !1x*
- 2HZ 2 Hz, 2 data points per second *index !2x*
- 10HZ 10 Hz, 10 data points per second *index !3x*
- LOW 0.4 Hz, 0.4 data points per second *index !4x*

The parameter RS232 attach defines the format of the data line, recorded to the host PC. Additional information beside the detector signal can be added. The following options are available:

- NONE Only the detector signal reported *index !x1*
- NOTICE Detector signal and status message *index !x2*
- COUNT Detector signal and counter *index !x3*
- BOTH Detector signal, counter and status message *index !x4*

Remarks:

- Initialization of data acquisition is only possible sending the command from host PC, starting using the internal key pad is not possible.
- Ending the data acquisition using the internal key pad is possible: Press ENTER key when RS232xxx is shown in the status line of the RI2000
- Running data acquisition is indicated by "…" in the RS232Data status line
- It is possible to read the index !xx, where xx represents a two digit number.

15.9 External Instrument Control

The digital input 'DigIN' on the backside of the RI2000 has two functions. It is used to record the start signal to initialize data acquisition and it is used to record the marker signal during data acquisition. The marker signal is used to mark special events during an analytical run such as valve switches or sample injections.

If 'DigIN' is activated the RI2000 refractive index detector reacts depending on the current data acquisition status.

Data Acquisition	Parameter RS232 Attach	RI2000 Reaction
Stopped	NOTICE or BOTH	Initialization of data acquisition, status message 'SE'.
Stopped	NONE or COUNT	Initialization of data acquisition
Running	NOTICE or BOTH	Status message 'MR'
Running	NONE or COUNT	No change

Remarks:

- If a command is processed successfully by the RI2000 refractive index detector, an acoustic signal will occur.
- It the serial port is deactivated (LOCK) the START/MARKER signal will be ignored.
- The digital input 'DigIN' can also be used to record a marker signal on the Recorder output.

15.10 Data Communication using the RS232 Interface

Generally the host PC sends commands in ASCII format to the RI2000 refractive index detector. Status messages and detector signals are reported in ASCII format, too.

The data acquisition status can be 'running' or 'stopped'. In the case 'stopped' no data packages are sent to the host PC. If the status is 'running', data packages are sent continuously to the host PC using the sample rate defined using the RI2000 firmware.

Following commands are accepted by the RI2000 refractive index detector:

ASCII	Hex		Executeable during stopped / running data acquisition
S, s	0x53, 0x73	Start data acquisition	Yes / No
H, h	0x48, 0x68	Stop data acquisition	No / Yes
Z, z	0x5A, 0x7A	Set flag AutoZero	Yes / Yes
P, p	0x50, 0x70	Set flag to switch purge valve	Yes / Yes
I, i	0x49, 0x69	Report instrument information	Yes / No
Space	0x20	Report single data point	Yes / No
other		No function, ignored	No / No

Remarks:

- If a command is executed successfully, an acoustic signal will occur.
- Setting a flag is not necessary the execution of a command.
- Letters which are not assigned to a command might be used as a command in later firmware versions.

15.10.1 DATA PACKAGES

A data package contains at least the detector signal and a termination sequence. Additional information such as status messages and a counter can be added.

The detector signal is reported in µV in form of a seven digit number with no decimals in the range from -8388607 µV up to +8388607µV. The format of the reported detector signal is:

1. Space (0x20) as separator
2. +/- (0x2D/0x2B) leading sign
3.-9 seven digits detector signal

The counter can be used to ensure that all data points are collected properly. Both – detector signal and counter – contain left hand zeros.

15.10.2 STATUS MESSAGES

Certain events or states are reported using status messages. Depending on the settings status messages are reported to the host PC. The status messages consist of four ASCII symbols, as listed below.

1. Space (0x20) as separator
2.-4. tree ASCII symbols (see table)

Message	
!SE	Start of data acquisition by external start signal
!SA	Start of data acquisition by host PC (‘S’-command)
!MR	Marker signal
!HL	End of data acquisition by host PC (‘H’-command)

15.10.3 TERMINATION SEQUENCE

Each reported data line is terminated with a carriage return (CR, 0x0D) followed by a line feed (LF, 0x0A). The minimum length of a data line is therefore 11 characters, the maximum length is 28 characters.

Remarks:

- Data reporting initialized by an external start signal (DinIN) or the ‘S’-command will not be terminated if the connection between detector and host PC is disconnected.
- Data acquisition can be terminated sending the ‘H’-command or by pressing ENTER in the RS232xxx sub menu.
- Content of the data packages might be altered if future firmware versions.

15.11 CHANGING SAMPLE RATE:

Press the [Menu] button until the display shows :RS232Data in the status line. Now use the ArrowUp (▲) or ArrowDown (▼) button to select the desired sample rate. You may select 1 Hz, 2 Hz and 10 Hz. By selecting the option LOCK the data transmission using the RS232 interface is disabled, no data will be sent. Press the ENTER button to confirm your selection.

15.12 DATA FORMAT

The current detector signal is transmitted in ASCII using the serial interface. The signal voltage is displayed with 7 digits and one leading sign. The reported voltage is displayed in microvolts [µV]. The current version (V. 4.0) of the RI2000 firmware allows data export in different data formats. (This is *not* supported in former versions.)

To change the data format press the Menu button until :RS232Attach is shown in the bottom line of the display. Now use the ArrowUp (▲) and ArrowDown (▼) button to select one of the following options:

Option	Result
None	Only the current detector signal [µV] is transmitted.
Count	Two columns are reported: The first column contains the detector's signal, the second column contains the current number of the data point (counter)
Notice	Two columns are reported: The first column contains the detector's signal, the second column contains a marker, if a certain event took place: **!SE**: External start signal (dig. Input) Start of data block **!SA**: External start signal (Computer) Start of data block **!HL**: External hold signal (Computer) End of data block

	!MR: Marker
Both	All information are transmitted in up to three columns.

15.13 Use of HyperTerminal to check out communication

To find out how the communication works simply use HyperTerminal, installed with Microsoft Windows. Using this terminal emulation you can directly send commands to the detector and see the result or 'answer' on the screen. HyperTerminal can be found in the program group **All Programs – Accessories – Communication** (WinXP Professional). When the program is started a name for the communication setup has to be defined. In the next step the communication port needs to be defined. Select the appropriate port from the displayed list. In the next dialog box the communication parameters need to be set, as described previously.

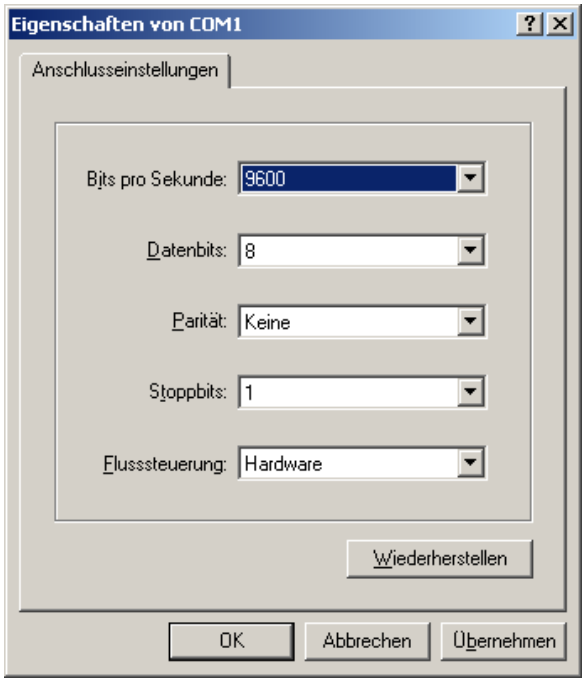

Click the **OK** button to establish the communication with the RI2000 detector. The terminal window will be show on your screen like the following example.

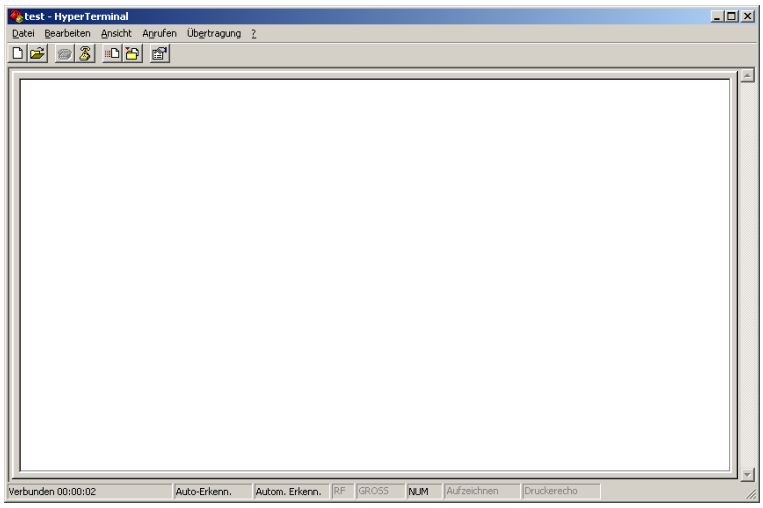

Press the **S** key to start data transmission or the **H** button to stop transmission. Pressing the **P** button will switch the purge valve, pressing **Z** will set the detector signal to zero.

When data are reported without any attached information the following screen appears:

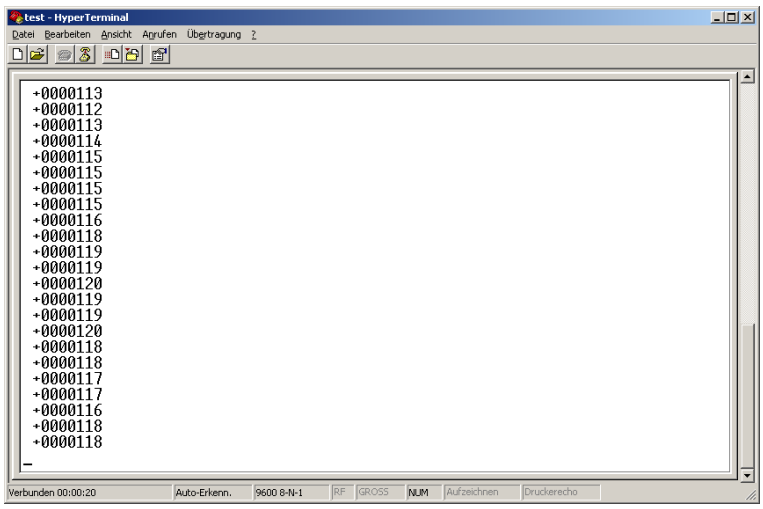

The format of the data packages depend on your format settings.

16 MAINTENANCE OF THE RI2000

16.1 IDENTIFYING HARD- AND SOFTWARE

If you need detailed information about your instrument such as the firmware version number or the instrument's serial number you can get this information in the service mode of the detector. Press the buttons ArrowLeft (◄) and ArrowRight (►) at the same time for approx. three seconds. The display will switch into service mode.

```
  Temp: +0028.500 °C
OptBal: +0013.425 %%
SIGNAL: +0031.700 mV
ServMode >>    (E,◄┘)
```

Press the MENU button until the menu SwHwInfo is shown in the status line.

```
  Temp: +0028.500 °C
OptBal: +0013.425 %%
SIGNAL: +0031.700 mV
ServMode >> SwHwInfo
```

Then press the ENTER button. The display will show the currently running firmware version and the serial number of the instrument. The full information can be found in line two of the display.

```
 Schambeck SFD GmbH
RI2000 V4.0 A8888801
SIGNAL: +0031.700 mV
ServMode    SwHwInfo
```

To return to the former display press the MENU button. To exit the service mode select the menu NormMode by pressing the MENU button and press ENTER.

16.2 Error Messages

In case of some malfunction the RI2000 refractive index detector may display an error message. The most error will appear directly after switching on the instrument.

16.2.1 Malfunction of the Temperature Sensor

There are two possible error messages indicating problems with the temperature sensor. A more detailed description of the temperature control of the RI2000 can be found in chapter 16.8.

The message “noTS” (no temperature sensor) will appear for that reason that the temperature sensor is not connected to the circuit board or not working.

```
  Temp:  ______noTS °C
OptBal:  ______13.4 %%
SIGNAL:  ______31.7 mV
NormMode  >> (E,⊞,◄┘)
```

The message “!” is shown if the temperature of the optical bench is outside the range between 9 °C and 64 °C. Beside the displayed message an acoustic signal will occur.

```
  Temp:  ______    ! °C
OptBal:  ______13.4 %%
SIGNAL:  ______31.7 mV
NormMode  >> (E,⊞,◄┘)
```

16.2.2 MALFUNCTION OF THE ANALOG DIGITAL CONVERTER

This error messages only occur directly after switching on the RI2000 refractive index detector.

```
  Temp:      28.5 °C
OptBal:      noAD %%
SIGNAL:      31.7 mV
NormMode  >> (E,⊞,◄┘)
```

If this message “noAD” shows up the analog digital converter did not connect to the micro controller. Switch of the instrument, wait for ten seconds and try to start again. If the problem remains contact the technical support.

```
  Temp:      noTS °C
OptBal:      noAD %%
SIGNAL:      31.7 mV
ServMode >> NormMode
```

After switching to service mode you will also notice the error message “noTS”. As the micro controller also controls the temperature of the optical bench this error message shows up but does not mean that there is a problem with the temperature sensor.

16.2.3 INTENSITY ALARM

The intensity alarm message can show up directly after initialization of the instrument or during operation. There are two different ways of displaying this message.

```
  Temp:      28.5 °C
OptBal:      13.4 %%
SIGNAL: intensity mV
NormMode  >> (E,⊞,◄┘)
```

```
  Temp:      28.5 °C
OptBal:      13.4 %%
SIGNAL: INTENSITY mV
NormMode  >> (E,⊞,◄┘)
```

It is normal that you get no beep from the RI2000 refractive index detector when you press the AutoZero or PURGE button while the 'INTENSITY' or 'intensity' error message is shown. In this case it makes no sense to press the AutoZero or Polarity buttons when there is no signal value shown in the display. The functions AutoZero and Polarity are only active if there is a detector signal.

Is the message "intensity" displayed the voltage U_{Summ} is below 1.7 V. The reason is low light intensity reaching the light sensor. To resolve this problem, try the following:

Purge the reference chamber and the sample chamber of the flow cell and make sure that both chambers are filled with mobile phase

- Check the light source (see chapter 16.4)
- Make sure the flow cell is clean
- Adjust the alignment of the optical system (see chapter 16.3)
- Check the lamp current, it might be too low.

In case of the message "INTENSITY" (all capital letters) the problem is that the voltage U_{Sum} is beyond 7.5 V. This might be caused by several facts:

- The lamp current is too high, check lamp current
- The cover of the optical system is open and light from outside reaches the light sensor

16.2.4 SIGNAL OUT OF RANGE

The error message of the type “OVER_AD*xx*” shows up if the analog digital converter gets a signal which is too high or too low.

```
  Temp:      28.5 °C
OptBal:      13.4 %%
SIGNAL: OVER_AD1H mV
NormMode  >> (E,⊞,◄┘)
```

```
  Temp:      28.5 °C
OptBal:      13.4 %%
SIGNAL: OVER_AD1L mV
NormMode  >> (E,⊞,◄┘)
```

```
  Temp:      28.5 °C
OptBal:      13.4 %%
SIGNAL: OVER_AD2H mV
NormMode  >> (E,⊞,◄┘)
```

```
  Temp:      28.5 °C
OptBal:      13.4 %%
SIGNAL: OVER_AD2L mV
NormMode  >> (E,⊞,◄┘)
```

To localize the problem the “*xx*” in the error message is filled with a two letter code according to the following table

xx=1H	sample voltage beyond 5 V
xx=2H	reference voltage beyond 5 V
xx=1L	sample voltage below 0 V
xx=2L	reference voltage below 0 V

The sample voltage corresponds to the light intensity reaching the light sensor on the sample side, as the reference voltage corresponds to the light intensity reaching the light sensor on the reference side.

When this error message shows up, try the following to solve the problem:

- Purge the flow cell to ensure that both chambers are filled with mobile phase (without bubbles)
- Check the optical balance (see chapter 16.3)

16.2.5 RESET CONFIGURATION

This type of error might only occur when the instrument is switched on. If the error message “RC” is shown in the display the controller was not able to load the internal configuration during the initialization.

```
  Temp:      28.5 °C
OptBal:      13.4 %%
SIGNAL:      31.7 mV
NormMode  RC (E,⊞,◄┘)
```

In this case for example the calibration factor is not loaded. The instrument’s setting will be set automatically to factory default settings. If you are performing quantitative analysis you have to re-calibrate your detector before you can proceed.

16.3 ADJUSTING THE OPTICAL SYSTEM

By adjusting the optical system of the RI2000 refractive index detector it is possible to influence the light intensity reaching the two photodiodes of the light sensor.
To perform the adjustment the sample chamber and the reference chamber of the flow cell have to be purged with distilled water. When both chambers contain the same liquid theoretically the same light intensity should reach the sample side and reference side of the light sensor. In this case the optical balance should be zero.
The adjustment of the optical system is performed manually. During this procedure the position of the light beam on the photo sensor is changed by adjusting the mirror.

During the procedure you can follow the changes by observing the change of the detector signal or more detailed by observing the difference and sum voltage.

For the calculation of the different voltages, the detector signal and the optical balance the following formulas are used:

$$Diff = Smpl - Rfrn$$

$$Summ = Smpl + Rfrn$$

$$OB = \frac{Diff}{Summ} \cdot 1000(‰)$$

$$Signal = POL \cdot (OB \cdot C_0 - AZ)$$

Where Signal is the calculated detector signal, POL the selected polarity, C_0 is the calibration factor resulting from the 3-step-calibration and AZ the ‘real’ signal before pressing the AutoZero button. The pre-set calibration factor is 2724. This factor is used if no 3-step-calibration of the instrument was performed.

To adjust the optical system follow the steps listed below.

- Switch to purge mode, make sure the red purge LED is on.
- Flush both chambers of the flow cell with clean mobile phase for several minutes until the detector signal is stable.

- Switch back to measuring mode, make sure the red purge LED is off.
- Remove the black caps at the back side of the instrument
- Put the hex-wrench into one of the opened hole

NOTE

There are two adjustment screws for the mirror. Keep in mind that you might have to turn the other screw. Anyway you should turn the screws not more that ½ or ¾ turns.

- Adjust the screws until the optical balance reaches a value of 0 ± 10 %%.

Now the adjustment for the used solvent is finished.

16.4 Lamp Exchange and Adjustment of the Lamp

It might be possible that you need to re-adjust the light source due to some changes in the used light bulb due to the transport or you need to replace a burned out lamp. The adjustment of the light source is only possible when the housing is opened. To prepare for adjustment do the following steps:

- Switch off the instrument
- Unplug the mains cable to prevent electrical shock when opening the housing

NOTE

Some operations during the adjustment have to be done when the instrument is in operation. So you need to re-connect the mains cable and to switch on the RI2000 refractive index detector. When the instrument is operated with opened housing make sure that you do NOT touch any electrical component!

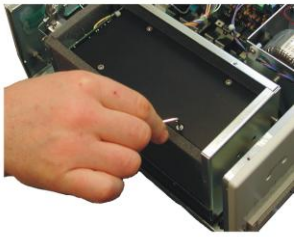

- Open the outer housing of the optical bench (chrome coloured)

- Open the inner black housing of the optical bench. You will see the optical system of the RI2000 refractive index detector. The components are shown below:

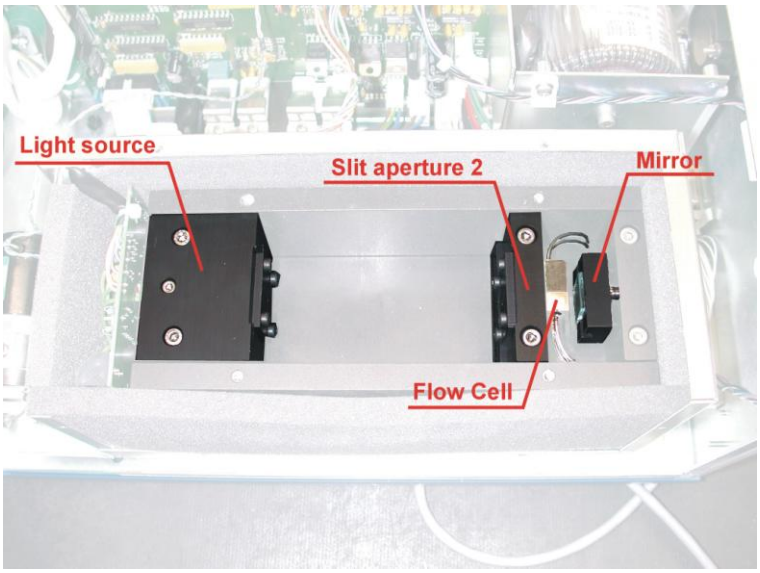

- Loosen the holding screw of the light source and remove the lamp.

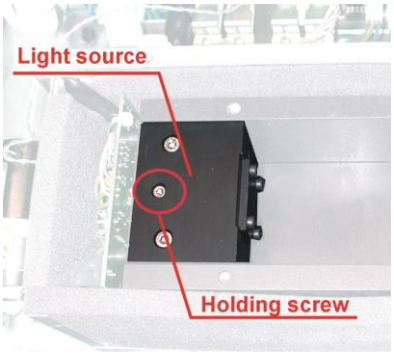

- Loosen the screw connector of the lamp's power supply at the pre-amplifier board (labelled: LAMPE)

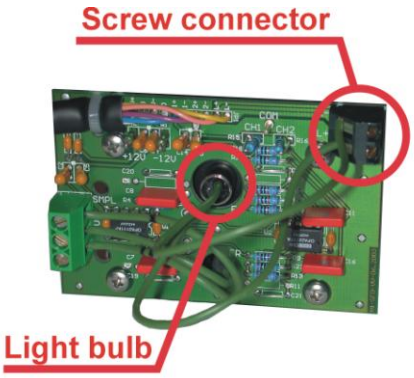

- Place a new lamp in the holder and tighten the holding screw

- Connect the power wires of the lamp with the screw connector on the pre-amplifier board.

- Connect the mains cable to the detector and switch on the instrument

NOTE

The following steps need to be performed on the running instrument. There is the danger of electrical shock when touching electrical components.

- Use a voltmeter to check the lamp voltage at the test points on the circuit board. The label of this test point depends on the version of this board. If the serial number of you instrument is 0312xxx the points are labelled 'Lampe' and 'GND', if the serial number of your instrument is 0401xxx the test points are labelled LampeULmp und 'GND'. To find your serial number see chapter 15.1.

  The lamp voltage should be 3.3 ± 0.3 V. If needed you can adjust this voltage by turning the potentiometer R19 at the main circuit board.

In the following two steps the light bulb is positioned for optimal operation.

Step 1:

Place the lamp in the holder resulting in a sharp picture of the illuminated area at the slit aperture 2. Usually the metal cover of the light bulb ends with the holder, sometimes the metal cover stands about 1 or 2 mm out of the metal block.

Step 2:

Turn the light bulb that the picture of the filament is parallel to the slit of the second slit aperture.

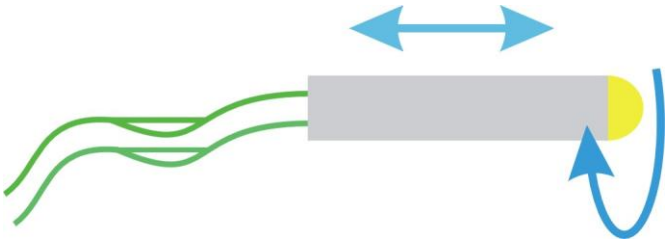

Make sure that only 2/3 of the slit are illuminated by the light source. This is illustrated in the following figure.

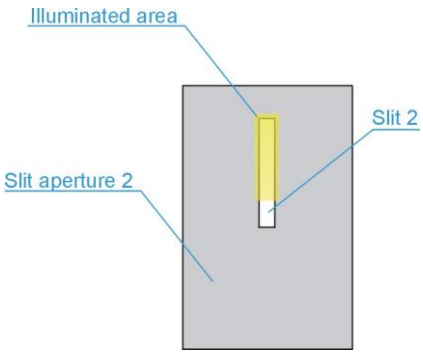

NOTE

The projected picture at the light sensor should be a sharp one. The full height of the photo diodes has to be illuminated by the light beam. This is shown in the following figure.

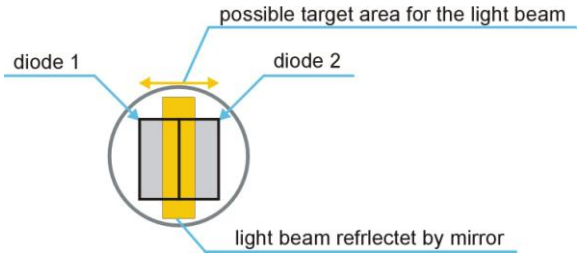

16.5 Checking Sum- and Difference Voltages

This chapter describes the check of the sum and difference voltages. These voltages result from different light intensities reaching the sample side and the reference side of the light sensor. To perform the check follow the steps listed below:

- Make sure the instrument is switched on and both chambers of the flow cell are filled with distilled water (without bubbles). In this case the optical balance should be 0 ± 20,0 %%. To ensure a stable temperature the instrument should be switched on for several hours before performing this test.

- Press the PURGE button. Make sure the purge mode is activated, the red purge LED should light up.

- Use a disposable syringe to press approx. 5 mL distilled water through the flow cell

- The display will show the current detector signal. If no signal is displayed please check chapter 16.2.

- Activate the service mode of the RI2000 by pressing the buttons ArrowLeft (◄) and ArrowRight (►) at the same time for approx. three seconds. The display will change to the following

```
  Temp: +0028.500 °C
OptBal: +0013.425 %%
SIGNAL: +0031.700 mV
ServMode >>     (E,↵)
```

- Press the MENU button until the status line in the display changes to ViewFine. Now press the ENTER button. The display will show four values.

```
Check Source Unit ↵
-0010 5030 2510 2520
SIGNAL: +0031.700 mV
ServMode >> ViewFine
```

To find out which value is displayed in which column press the ENTER button. The display will change to the following view:

```
Check Source Unit ↵
 Diff Summ Smpl Rfrn
SIGNAL: +0031.700 mV
ServMode >> ViewFine
```

To go back to the former view press the ENTER button again.

Diff represents the difference voltage (in mV) and corresponds to the difference of intensity reaching the sample side and the reference side of the light sensor.

Summ represents the sum voltage (in mV) and corresponds to the light intensity reaching both sides of the light sensor.

Smpl represents the sample voltage which corresponds to the light intensity reaching the sample side of the light sensor.

Rfrn represents the reference voltage which corresponds to the light intensity reaching the reference side of the light sensor.

The voltages are calculated according to the following formulas

$$Diff = Smpl - Rfrn$$
$$Summ = Smpl + Rfrn$$

- Use a multimeter to check the lamp voltage at the test point on the circuit board. For this you need the serial number of your instrument (see chapter 15.1) to locate the test points. If you serial number is 0312xxx the points are labelled “Lampe” and “GND”. In case of a serial number of 0401xxx the points are labelled “LampeULmp” and “GND”. In both cases the lamp voltage should be set 3.3 ± 0.3 V. On pages 78 and 79 you can find a schematic view of the main circuit board with the marked positions of the test points.

- If the sum voltage is only a few millivolt the light bulb does not work. Check the power cables of the light source to make sure that they are connected properly. If needed check the light source (see chapter 16.4).

- The sum voltage should be in the region of 5000 ± 500 mV. If this is not the case adjust the lamp voltage by turning the potentiometer R19 until the sum voltage is in the region of 5000 ± 500 mV.

- Due to the adjustment of the light intensity it is necessary to check the lamp voltage again. If this voltage is not in the region von 3.3 ± 0.3 V the light source has to be re-adjusted.

- The optical system is adjusted properly if the sum voltage is 5000 ± 500 mV and the lamp voltage 3.3 ± 0.3 V.

16.6 Check and Replacement of the Valve

If the valve which is used to switch the path of the mobile phase in the normal measuring mode and purge mode needs to be replaces follow the following steps:

- Switch of the RI2000 refractive index detector and unplug the mains cable

NOTE

To prevent electrical shock make sure that the power cable is disconnected before opening the housing of the instrument.

- Remove the stainless steel capillaries from the valve body.

NOTE

Remind the position of the capillaries for proper re-connection.

- Loosen the control cable of the valve at the main circuit board.
- Loosen the two screws holding the valve body.
- Remove the valve body and replace with the new one.
- Tighten the holding screws and reconnect the capillaries in the correct positions.
- Connect the signal cable to the contact labelled “Valve” on the main circuit board.

- Start you chromatography pump to flush mobile phase through your RI2000 detector.

- Check the capillary connections for any leakage.

- Close the instrument’s housing.

16.7 Checking and Cleaning the Flow Cell

In some cases it might be necessary to clean the flow cell inside the RI2000 refractive index detector. You should try to wash away possible contaminations by purging both chambers of the flow cell with fresh mobile phase for a longer time.
If you are not sure it the problems are caused by a contaminated flow cell or caused by other problem contact the technical service of you local distributor or Schambeck SFD GmbH directly.

Possible reasons to open the optical bench for checking the flow cell:

- Drop of the sum voltage below 4500 mV. Make sure that your sample chambers are washed and filled with distilled water (without bubbles) before checking the sum voltage.
- Noisy baseline (may be caused by small particles in the flow cell)
- Constant drift of the baseline

To check the flow cell inside you detector follow the steps listed below:

- Switch of the instrument and unplug the power cable. Open the detectors housing after loosening the screws.

NOTE

When performing service work inside the instrument's housing make sure that the power cable is disconnected.

- Open the outer housing of the optical bench after loosening the screws
- Remove the heat insulation on top of the optical bench

- Open the inner (black) housing after loosening the screws
- Loosen the two hex-screws holding the slit aperture 2 and remove the aperture carefully
- Use a flash light to check the flow cell for contaminants or damages. Make sure that no bubbles are inside the flow cell.
- If there are contaminants in the flow cell purge it with a suitable solvent. If you are working with aqueous systems distilled water is convenient. If you use organic substances try solvents like acetone, tetrahydrofurane or chloroform. After purging the cell with solvent to clean for a longer time you should purge it with you mobile phase and check again if the contaminants is removed.

NOTE

In the case of dangerous solvents make sure that they are disposed correctly.

NOTE

In case of aqueous solvents it is possible that algae grow inside your chromatographic system. For that reason it is not recommended to store the detector for a longer time with aqueous solvents inside. For long time storage it is recommended to purge the flow cell with ethanol followed by air.
If possible we recommend the addition of a small amount of organic solvent (such as isopropanol or methanol) to your mobile phase to prevent algae growth.

If it is not possible to remove the contaminant from your flow cell it might be necessary to replace it with a new flow cell. Please contact your local distributor or Schambeck SFD GmbH directly for assistance.

If the flow cell is cleaned set the slit aperture back in it's position and fix it
Put the lid on the inner housing and tighten the screws

Place the heat insulation back on top of the inner housing

Close the outer housing and tighten the screws

Perform a measurement to check if the problem is solved now. If you still have problems using your RI2000 refractive index detector please contact you local distributor or Schambeck SFD GmbH directly for assistance.

16.8 The Heating Circuit of the RI2000

In the following chapter the complete specification of the RI2000 heating circuit is put together.

- In the normal measuring mode (NormMode) the temperature is displayed with one digit (e. g. 27.1 °C). If you want a more detailed information you can switch to the service mode (ServMode) where the temperature is displayed with three digits (e.g. 27.094 °C).
- The temperature sensor will be detected automatically when the instrument is switched on.
- If the heating is switched off the optical bench is operated at a temperature of about 6 °C above ambient temperature due to heat irradiated of electronic compounds.
- In the interval from 35 °C up to 55 °C the temperature can be selected in 1 °C steps. The temperature difference of 6 °C has to be considered. If the heating is activated a asterisk (*) is shown in the upper left corner of the display.
- The heat cartridge used in the RI2000 refractive index detector has an internal resistance of 750 Ω.
- The temperature sensor is controlled by the micro controller. Heating is deactivated and cannot be activated for one of the following reasons:
    - The temperature sensor does not work or is not connected to the main circuit board. In this case the error message “noTS” will be displayed.
    - The current temperature of the optical bench is below 9 °C or beyond 65 °C. In this case the error message “!” will show up and an acoustic signal occurs.
    - If the heating is not switched off properly by the firmware a thermal fuse will switch off the heating at a temperature of 72 °C.

17 Voltage Test Points

The following list contains different test points on the main circuit board of the RI2000 refractive index detector.

All voltages listed below are measured in relation to Ground GND or AGND. Both are connected to the instrument's housing through the holding screws on the circuit board. Check the serial number of you instrument (see chapter 15.1) to locate the test points on the board. The figure on page 80 shows the board used in instruments if the 0312xxx series. The figure on page 81 shows the board used in instruments of the 0401xxx series.

GND	digital ground
AGND	analog ground

Uncontrolled voltages

Ud*	10.8 V	for RI2000 with serial number up to SN 0212220
	11.3 V	for RI2000 with serial number from SN 0212221

Stabilized voltages

Vcc	controlled voltage for digital circuits
U_{Lmp}	controlled lamp voltage
U_{ref} or TP14	reference voltage for the A/D-converter

Test point	Voltage	Adjustment
Vcc	5.0 V	-
U_{Lmp}	2.5 to 5.1 V	Potentiometer R19
+12 V	+12 V	-
-12 V	-12 V	-
+5 V	+5 V	-
-5 V	-5 V	-
Uref or TP14	2.5 V	-

Signal voltages

The voltages you find at this test point should correspond to the voltages shown in the detector's display in ViewFine mode.

Test point	Voltage
ch1	corresponding to Smpl voltage of the optical bench
ch2	corresponding to Rfrn voltage of the optical bench
INT	voltage of the analog integrator output
REC	voltage of the analog recorder output

18 SPARE PARTS

Article No.	Description
RI2000-001	Flow cell for the RI2000 refractive index detector
RI2000-002	Valve for the RI2000 refractive index detector
RI2000-012	Tungsten lamp fir the RI2000 refractive index detector
RI2000-023	Fan for the RI2000 refractive index detector
RI2000-024	Set of sealings for the RI2000 refractive index detector
90-ZBU1	Outlet port screws (0.75 mm I.D.) for RI2000
90-ZBU1C	Inlet port screws (0.25 mm I.D.) for RI2000

Spare parts you can order from your local distributor or from Schambeck SFD GmbH directly.

19 Test Points for Lamp Voltage (for Serial Number 0312xxx)

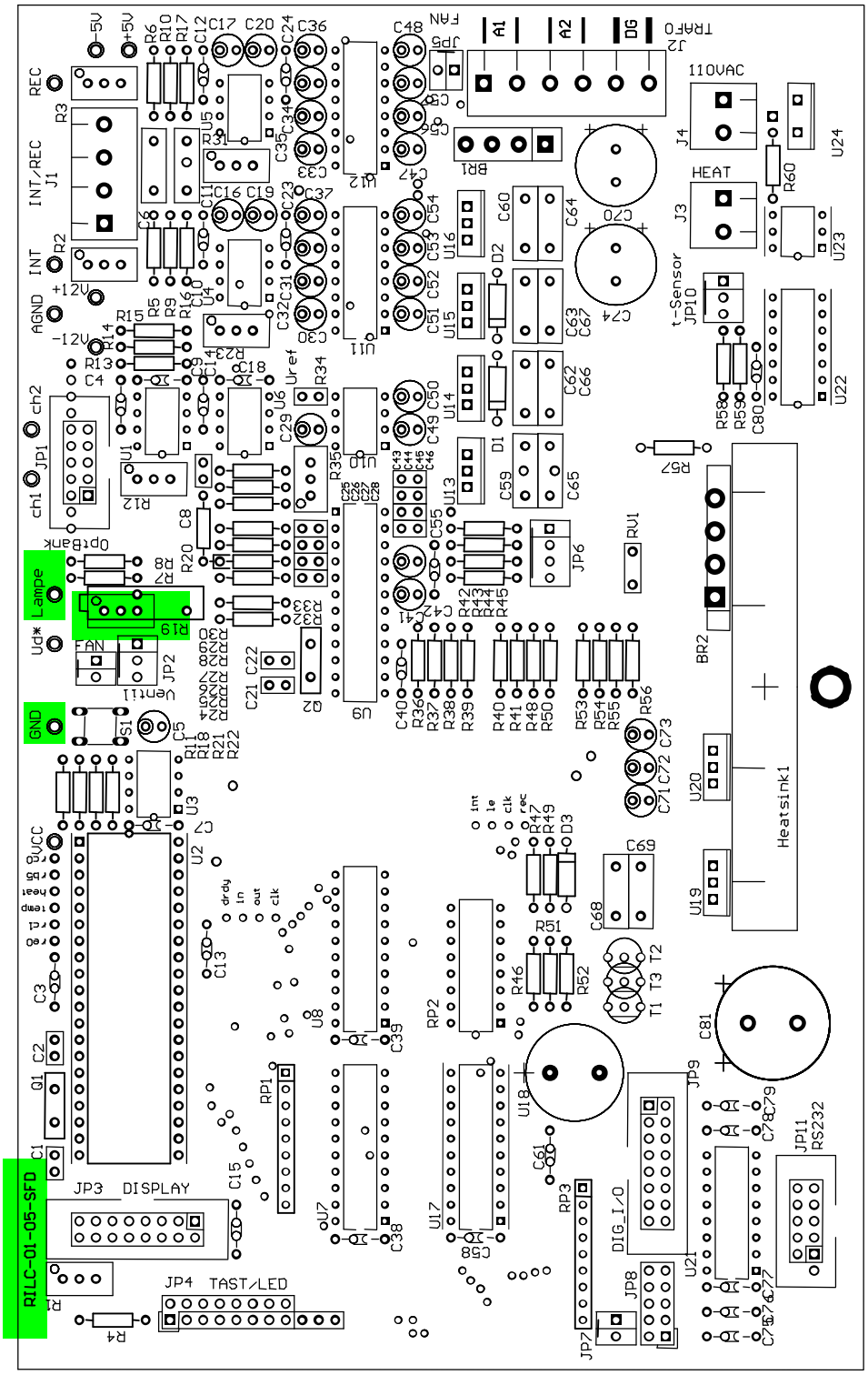

20 Test Points for Lamp Voltage (for Serial Number 0401xxx)

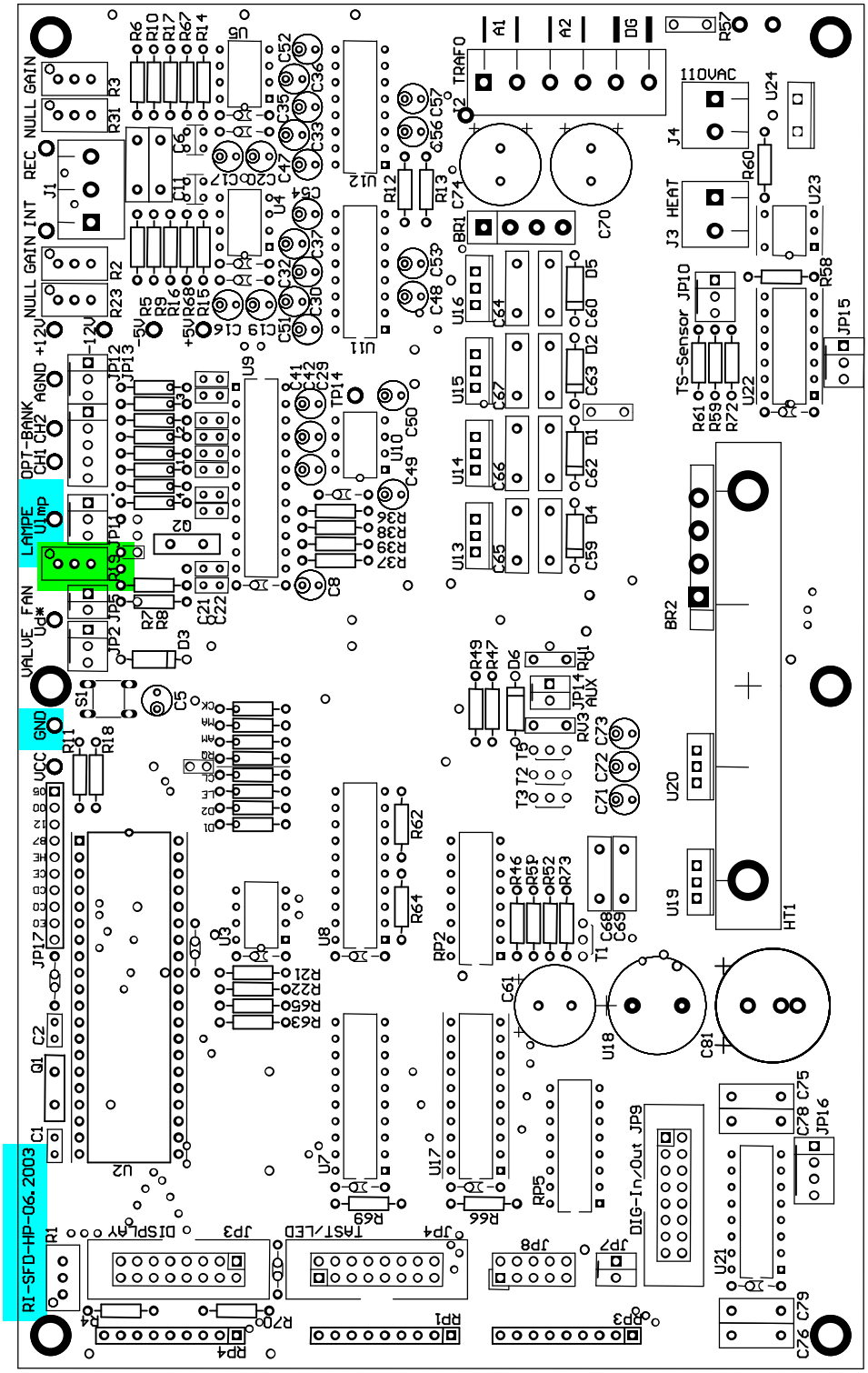

21 Voltage Test Points (Overview) for 0312xxx series

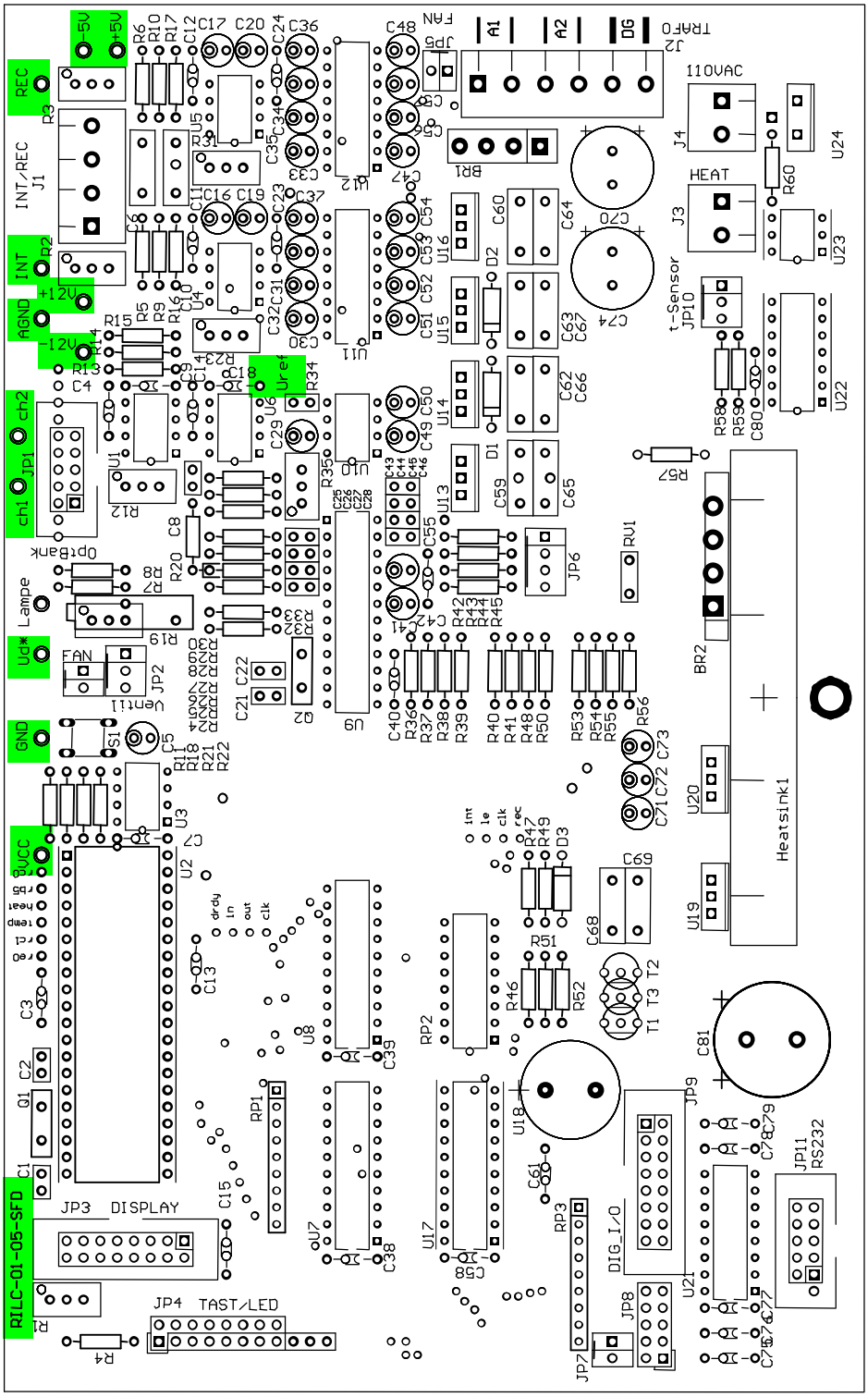

22 Voltage Test Points (Overview) for 0401xxx series

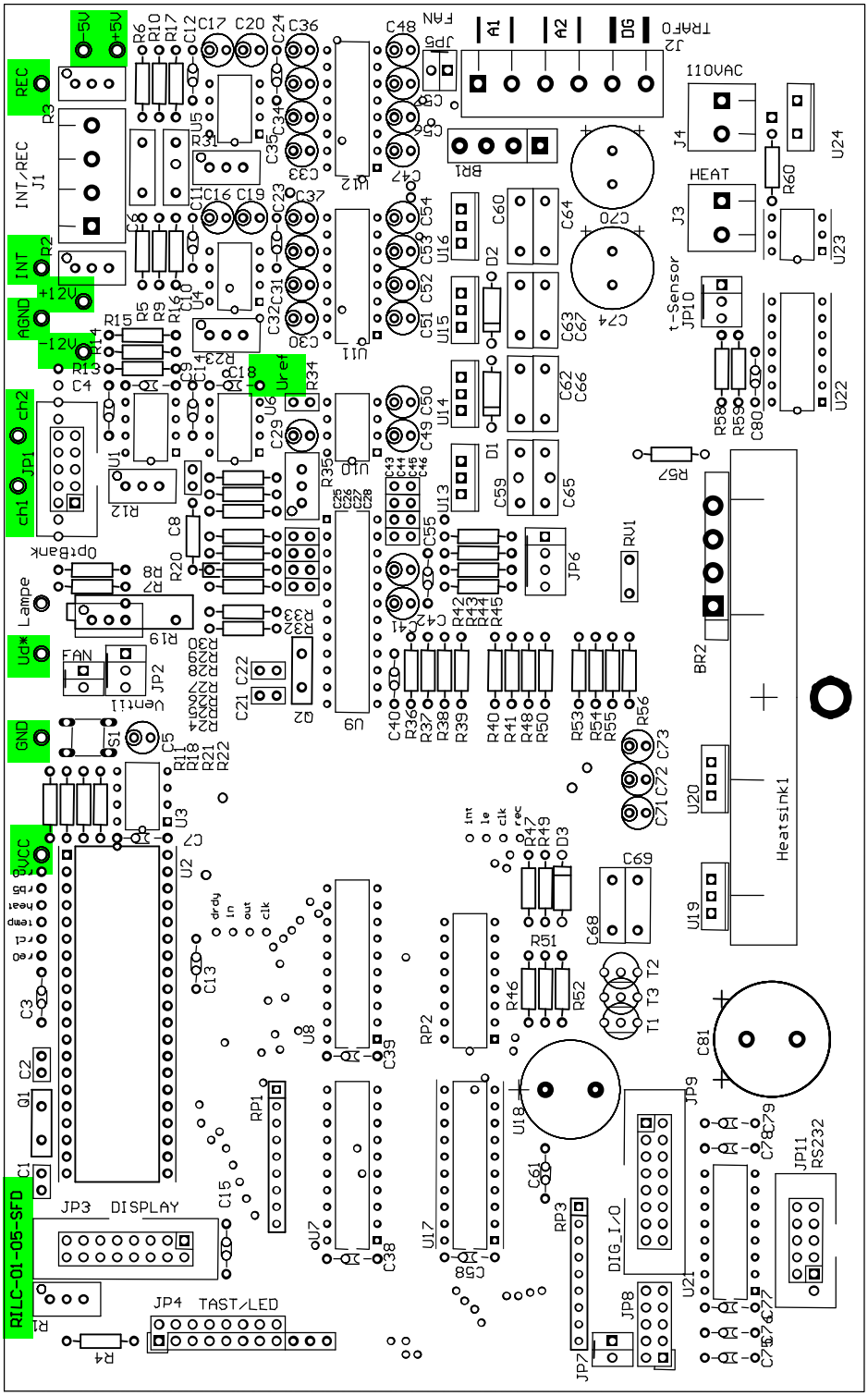

DECLARATION OF CONFORMITY

Konformitätserklärung
Declaration of Conformity
Declaration de Conformité

Wir We Nous	Schambeck SFD GmbH
Anschrift Address Adress	Rhöndorfer Str. 51 D-53604 Bad Honnef Germany

erklären in alleiniger Verantwortung, dass das Produkt:
declare under our sole responsibility, that the product:
declarons sous notre seule responsibilité, que le produit:

Bezeichnung Name Nom	Brechungsindexdetector Refractive Index Detector

Typ, Modell, Artikel-Nr., Type, Model, Article No., Type, Modèle, Mo. d'Article,	RI2000

Verwendete Werkstoffe:
Applied Materials:
Materiaux utilisés:

mit den Anforderungen der Normen und Richtlinien
fulfills the requirements of the standard and regulations of the Directive
satisfait aux exigences des normes et directives

73/23/EWG	**Niederspannungsrichtlinie/Low Voltage Regulation**
DIN EN 61010	Sicherheitsbestimmungen für elektrische Mess-, Steuer-, Regel- und Laborgeräte
89/336/EWG	**Elektromagnetische Verträglichkeit EMV**
DIN EN 50081	*Fachgrundnorm Störaussendung*
EN 55022	Messung der Funkstörspannung von 150 kHz bis 30 MHz
EN 55022	Messung der Funkstörfeldstärke von 30 MHz bis 1 GHz
DIN EN 500082	*Fachgrundnorm Störfestigkeit*
IEC 1000-4-2	Prüfung der Störfestigkeit gegen Entladung statischer Elektrizität
ENV 50140	Prüfung der Störfestigkeit gegen hochfrequente Einstrahlung
IEC 1000-4-4	Prüfung der Störfestigkeit gegen schnelle transiente Impulse
ENV 50142	Prüfung der Störfestigkeit gegen Stoßspannungen
ENV 50141	Prüfung der Störfestigkeit gegen Hochfrequente Einkopplung
IEC1000-4-11	Prüfung der Störfestigkeit gegen Netzunterbruch

und den angezogenen Prüfberichten übereinstimmt und damit den Bestimmungen entspricht.
and the taken test reports und therefore corresponds to the regulations of the Directive.
et les rapports d'essais nitifiés et, ainsi, correspond aux règlement de la Directive.

Bad Honnef, 01. October, 1999	Karl-Heinz Schambeck
Ort und Datum der Ausstellung Place and Date of Issua Lieu et date d'établissement	Name und Unterschrift des Befugten Name and Signature of authorized person Nom et signature de la personne autorisée